Rhino®
SD2/XD2 Pumps

Customer Product Manual
Part 1073520-12
Issued 4/13

For parts and technical support, call the Nordson Industrial Coating Systems Customer Support Center at (800) 433–9319, or contact your local Nordson Representative.

This document is subject to change without notice.
Check http://emanuals.nordson.com/finishing for the latest version.

NORDSON CORPORATION • AMHERST, OHIO • USA

Table of Contents

Safety 1
Qualified Personnel 1
Intended Use 1
Regulations and Approvals 1
Personal Safety 1
High-Pressure Fluids 1
Fire Safety 2
Halogenated Hydrocarbon Solvent Hazards . 2
Action in the Event of a Malfunction 2
Disposal 2
Description 3
Theory of Operation 4
Air Motor 4
Hydraulic Section 4
Repair 7
Consumable Items 7
Break Down the Pump 8
Repairs to the Hydraulic Section 8
Repairs to the Air Motor 8
Standard and Temperature Conditioned Hydraulic Sections 10
Disassemble the Hydraulic Section 10
Assemble the Hydraulic Section 10
Rebuild the Packing Gland 12
Stainless Steel Hydraulic Section 14
Disassemble the Hydraulic Section 14
Assemble the Hydraulic Section 14
Air Motor 16
Replace the Trip-Rod U-Cup 16
Replace a Pilot Valve 18
Replace the Supply Tube Quad- and O-Rings 20
Replace the Piston Rod Retainer U-Cup and O-Ring 20
Replace the Piston Assembly 22
Assemble the Pump 24
Parts 26
Common Parts 26
Air Motor 28
5.8 Cubic Inch Standard and Temperature Conditioned Hydraulic Sections . . . 34
8.1 Cubic Inch Standard and Temperature Conditioned Hydraulic Sections . . . 36
8.1 Cubic Inch Stainless Steel Hydraulic Section 38
Tools 39
Kits 40
Mounting Hardware 41
30/55-Gallon Drum Unloaders 41
5-Gallon Pail Unloaders 41
Specifications 42
Air Motor 42
Hydraulic Section 42
Air Requirements 43
Pneumatic Schematic 44
Preventive Maintenance 45

Contact Us

Nordson Corporation welcomes requests for information, comments, and inquiries about its products. General information about Nordson can be found on the Internet using the following address: http://www.nordson.com.

Address all correspondence to:

Nordson Corporation
Attn: Customer Service
555 Jackson Street
Amherst, OH 44001

Notice

This is a Nordson Corporation publication which is protected by copyright. Original copyright date 2006. No part of this document may be photocopied, reproduced, or translated to another language without the prior written consent of Nordson Corporation. The information contained in this publication is subject to change without notice.

Trademarks

Nordson, the Nordson logo, and Rhino are registered trademarks of Nordson Corporation.

All other trademarks are the property of their respective owners.

© 2013 Nordson Corporation

Change Record

Revision	Date	Change
A09	6/09	Removed data on customer-specific pumps 1082087, 1082225, 1082478, 1082503, and 1084887. Refer to manual 1096339A for customer-specific pump data.
A10	8/09	Add part number for new rod assembly design.
A11	11/10	Add new Drive Train Kit part numbers.
A12	4/13	Add XD2 Stainless Steel Packing Gland internal components kit 1603003.

© 2013 Nordson Corporation

© 2013 Nordson Corporation

Safety

Read and follow these safety instructions. Task- and equipment-specific warnings, cautions, and instructions are included in equipment documentation where appropriate.

Make sure all equipment documentation, including these instructions, is accessible to persons operating or servicing equipment.

Qualified Personnel

Equipment owners are responsible for making sure that Nordson equipment is installed, operated, and serviced by qualified personnel. Qualified personnel are those employees or contractors who are trained to safely perform their assigned tasks. They are familiar with all relevant safety rules and regulations and are physically capable of performing their assigned tasks.

Intended Use

Use of Nordson equipment in ways other than those described in the documentation supplied with the equipment may result in injury to persons or damage to property.

Some examples of unintended use of equipment include

- using incompatible materials
- making unauthorized modifications
- removing or bypassing safety guards or interlocks
- using incompatible or damaged parts
- using unapproved auxiliary equipment
- operating equipment in excess of maximum ratings

Regulations and Approvals

Make sure all equipment is rated and approved for the environment in which it is used. Any approvals obtained for Nordson equipment will be voided if instructions for installation, operation, and service are not followed.

Personal Safety

To prevent injury follow these instructions.

- Do not operate or service equipment unless you are qualified.
- Do not operate equipment unless safety guards, doors, or covers are intact and automatic interlocks are operating properly. Do not bypass or disarm any safety devices.
- Keep clear of moving equipment. Before adjusting or servicing moving equipment, shut off the power supply and wait until the equipment comes to a complete stop. Lock out power and secure the equipment to prevent unexpected movement.
- Relieve (bleed off) hydraulic and pneumatic pressure before adjusting or servicing pressurized systems or components. Disconnect, lock out, and tag switches before servicing electrical equipment.
- While operating manual spray guns, make sure you are grounded. Wear electrically conductive gloves or a grounding strap connected to the gun handle or other true earth ground. Do not wear or carry metallic objects such as jewelry or tools.
- If you receive even a slight electrical shock, shut down all electrical or electrostatic equipment immediately. Do not restart the equipment until the problem has been identified and corrected.
- Obtain and read Material Safety Data Sheets (MSDS) for all materials used. Follow the manufacturer's instructions for safe handling and use of materials, and use recommended personal protection devices.
- Make sure the spray area is adequately ventilated.
- To prevent injury, be aware of less-obvious dangers in the workplace that often cannot be completely eliminated, such as hot surfaces, sharp edges, energized electrical circuits, and moving parts that cannot be enclosed or otherwise guarded for practical reasons.

High-Pressure Fluids

High-pressure fluids, unless they are safely contained, are extremely hazardous. Always relieve fluid pressure before adjusting or servicing high pressure equipment. A jet of high-pressure fluid can cut like a knife and cause serious bodily injury, amputation, or death. Fluids penetrating the skin can also cause toxic poisoning.

If you suffer a fluid injection injury, seek medical care immediately. If possible, provide a copy of the MSDS for the injected fluid to the health care provider.

The National Spray Equipment Manufacturers Association has created a wallet card that you should carry when you are operating high-pressure spray equipment. These cards are supplied with your equipment. The following is the text of this card:

© 2013 Nordson Corporation

WARNING: Any injury caused by high pressure liquid can be serious. If you are injured or even suspect an injury:

- Go to an emergency room immediately.
- Tell the doctor that you suspect an injection injury.
- Show him this card
- Tell him what kind of material you were spraying

MEDICAL ALERT—AIRLESS SPRAY WOUNDS: NOTE TO PHYSICIAN

Injection in the skin is a serious traumatic injury. It is important to treat the injury surgically as soon as possible. Do not delay treatment to research toxicity. Toxicity is a concern with some exotic coatings injected directly into the bloodstream.

Consultation with a plastic surgeon or a reconstructive hand surgeon may be advisable.

The seriousness of the wound depends on where the injury is on the body, whether the substance hit something on its way in and deflected causing more damage, and many other variables including skin microflora residing in the paint or gun which are blasted into the wound. If the injected paint contains acrylic latex and titanium dioxide that damage the tissue's resistance to infection, bacterial growth will flourish. The treatment that doctors recommend for an injection injury to the hand includes immediate decompression of the closed vascular compartments of the hand to release the underlying tissue distended by the injected paint, judicious wound debridement, and immediate antibiotic treatment.

Fire Safety

To avoid a fire or explosion, follow these instructions.

- Ground all conductive equipment. Use only grounded air and fluid hoses. Check equipment and workpiece grounding devices regularly. Resistance to ground must not exceed one megohm.
- Shut down all equipment immediately if you notice static sparking or arcing. Do not restart the equipment until the cause has been identified and corrected.
- Do not smoke, weld, grind, or use open flames where flammable materials are being used or stored.
- Do not heat materials to temperatures above those recommended by the manufacturer. Make sure heat monitoring and limiting devices are working properly.
- Provide adequate ventilation to prevent dangerous concentrations of volatile particles or vapors. Refer to local codes or your material MSDS for guidance.
- Do not disconnect live electrical circuits when working with flammable materials. Shut off power at a disconnect switch first to prevent sparking.
- Know where emergency stop buttons, shutoff valves, and fire extinguishers are located. If a fire starts in a spray booth, immediately shut off the spray system and exhaust fans.
- Shut off electrostatic power and ground the charging system before adjusting, cleaning, or repairing electrostatic equipment.
- Clean, maintain, test, and repair equipment according to the instructions in your equipment documentation.
- Use only replacement parts that are designed for use with original equipment. Contact your Nordson representative for parts information and advice.

Halogenated Hydrocarbon Solvent Hazards

Do not use halogenated hydrocarbon solvents in a pressurized system that contains aluminum components. Under pressure, these solvents can react with aluminum and explode, causing injury, death, or property damage. Halogenated hydrocarbon solvents contain one or more of the following elements:

Element	Symbol	Prefix
Fluorine	F	"Fluoro-"
Chlorine	Cl	"Chloro-"
Bromine	Br	"Bromo-"
Iodine	I	"Iodo-"

Check your material MSDS or contact your material supplier for more information. If you must use halogenated hydrocarbon solvents, contact your Nordson representative for information about compatible Nordson components.

Action in the Event of a Malfunction

If a system or any equipment in a system malfunctions, shut off the system immediately and perform the following steps:

- Disconnect and lock out system electrical power. Close hydraulic and pneumatic shutoff valves and relieve pressures.
- Identify the reason for the malfunction and correct it before restarting the system.

Disposal

Dispose of equipment and materials used in operation and servicing according to local codes.

© 2013 Nordson Corporation

Description

See Figure 1 and refer to Table 1 for a description of the pump components.

NOTE: Installation and operation are dependent upon the bulk unloader and application. Refer to your system documentation for detailed information.

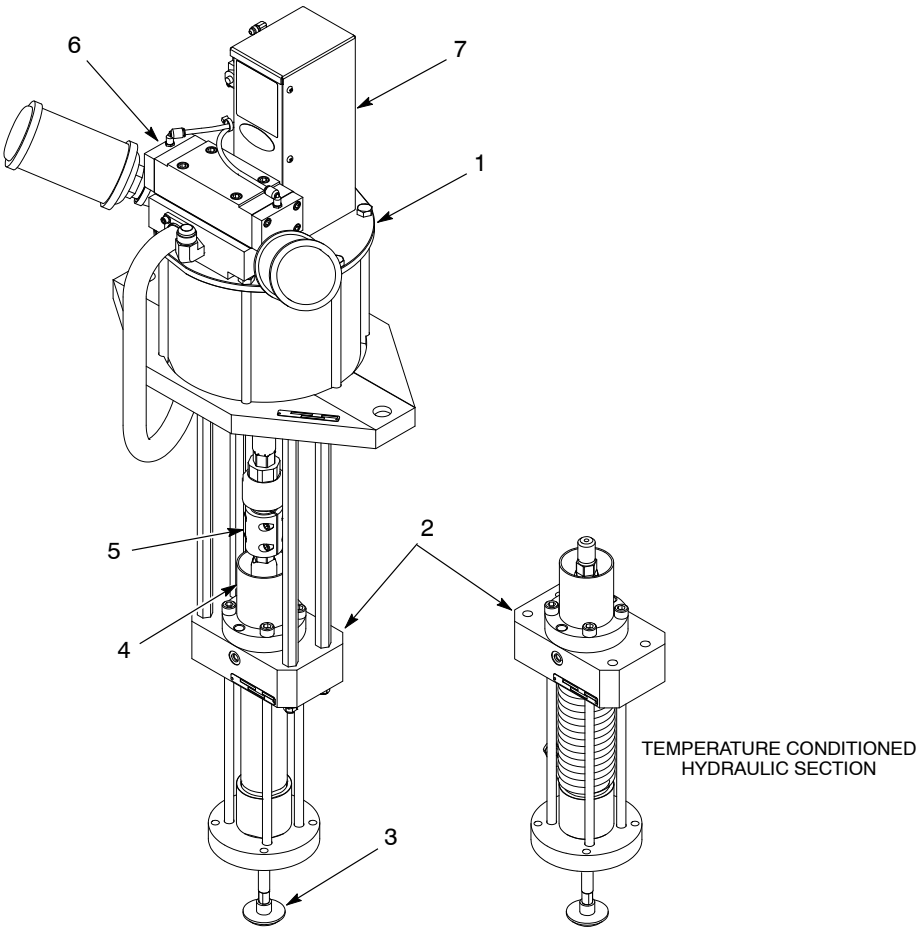

Figure 1 Typical Rhino SD2/XD2 Pump

Table 1 Rhino Pump Components

Item	Description
1	10-Inch Air Motor: Drives the hydraulic section.
2	Hydraulic Section: The hydraulic section pressurizes the material and forces it out of the pump. The following hydraulic section are available: • Standard 5.8- and 8.1- cubic inch • 5.8- and 8.1- cubic inch temperature conditioned • Stainless Steel 8.1-cubic inch
3	Shovel: Forces material into the hydraulic section.
4	Solvent Chamber: Contains fluid to lubricate the plunger and packing gland seals; prevents material from hardening on the plunger rod
5	Coupling: Connects the air motor coupling shaft to the hydraulic section plunger rod.
6	Main Air Control Valve: Controls the air motor shaft movement by shifting a spool. The spool exhausts air on one side of the piston and directs air pressure to the opposite side of the piston.
7	Pilot and Intermediate Valves: Controls the direction of the air motor shaft. Has manual overrides to manually override the upward and downward stroke of the pump.

© 2013 Nordson Corporation

Theory of Operation

The following paragraphs provide theory of operation for a typical pump air motor and hydraulic section.

Air Motor

See Figure 2. The air motor drives the hydraulic section. A five-way two-position main air control valve controls the direction of the air motor shaft movement.

When the air motor piston moves up and down, the piston trip-bar trips the pilot valves. The pilot valves send momentary signals to an intermediate valve. The intermediate valve sends a positive continuous signal to the main air motor control valve for each direction of travel. The intermediate valve has manual overrides for air motor directional changes for performing repairs and assembling.

Hydraulic Section

See Figure 3. The hydraulic section has a shovel attached to the end of the hydraulic plunger that projects into the center of the follower plate. The shovel moves up and down with the plunger, helping to force material into the hydraulic section. The hydraulic section pressurizes the material and forces it out of the pump.

When the plunger strokes downward, the piston/upper check opens and the lower check closes. Material between the upper and lower checks is forced upward through the piston. The material above the upper check pressurizes and flows out of the material output port.

NOTE: The stainless steel version is a single-acting hydraulic section that only displaces material on the downward stroke.

During the upward pump stroke, the plunger and shovel are pulled upward and the piston/upper check closes. The lower check opens and allows material to pass into the lower pump chamber below the upper check. As the plunger and piston move upward, material from the upper pump chamber is forced out of the material outlet port.

The solvent chamber surrounds the plunger. The chamber contains solvent chamber fluid that lubricates the plunger and packing gland seals. This fluid keeps material from hardening on the plunger and minimizes wear on the packing gland seals. The bleed valve is used to bleed air from the pump.

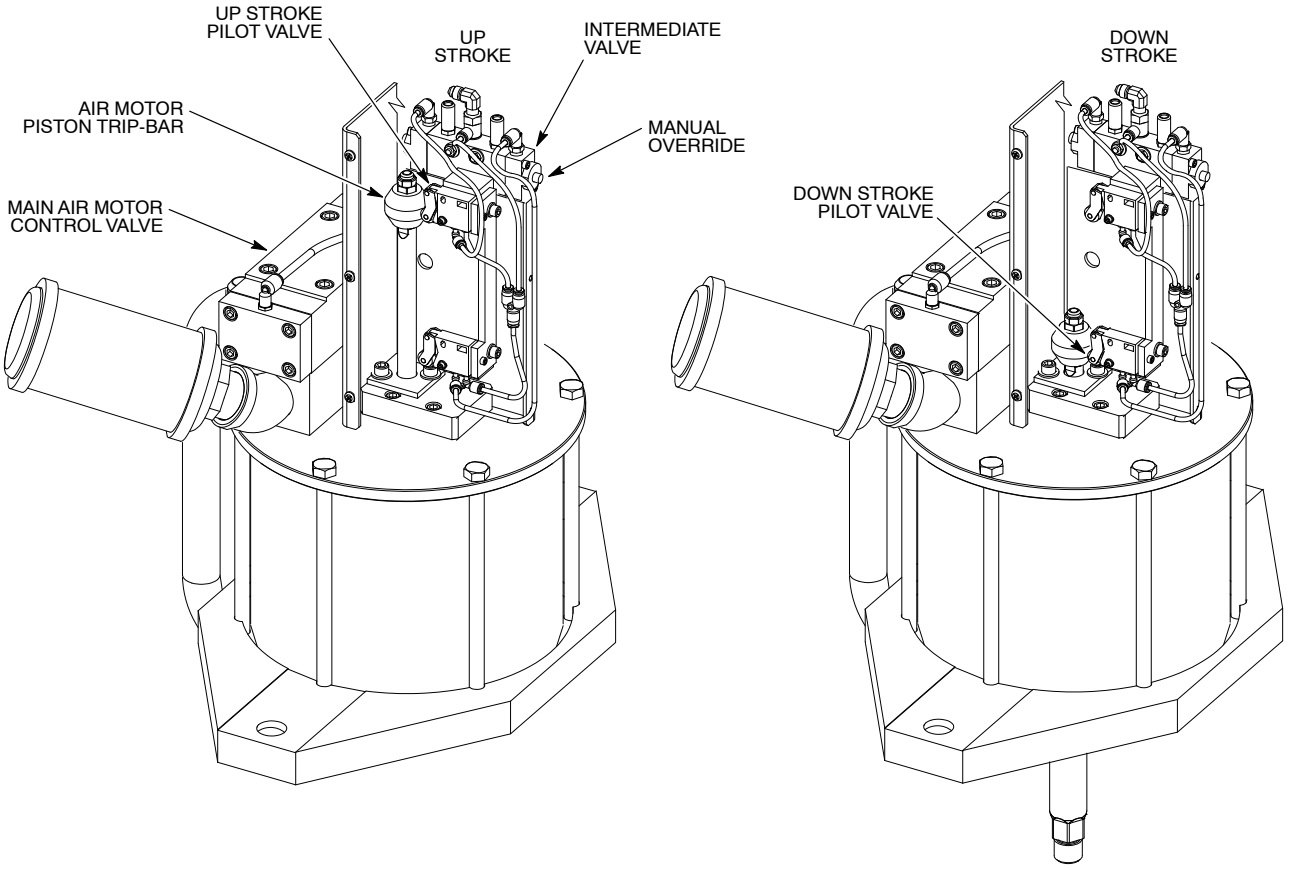

Figure 2 Air Motor

© 2013 Nordson Corporation

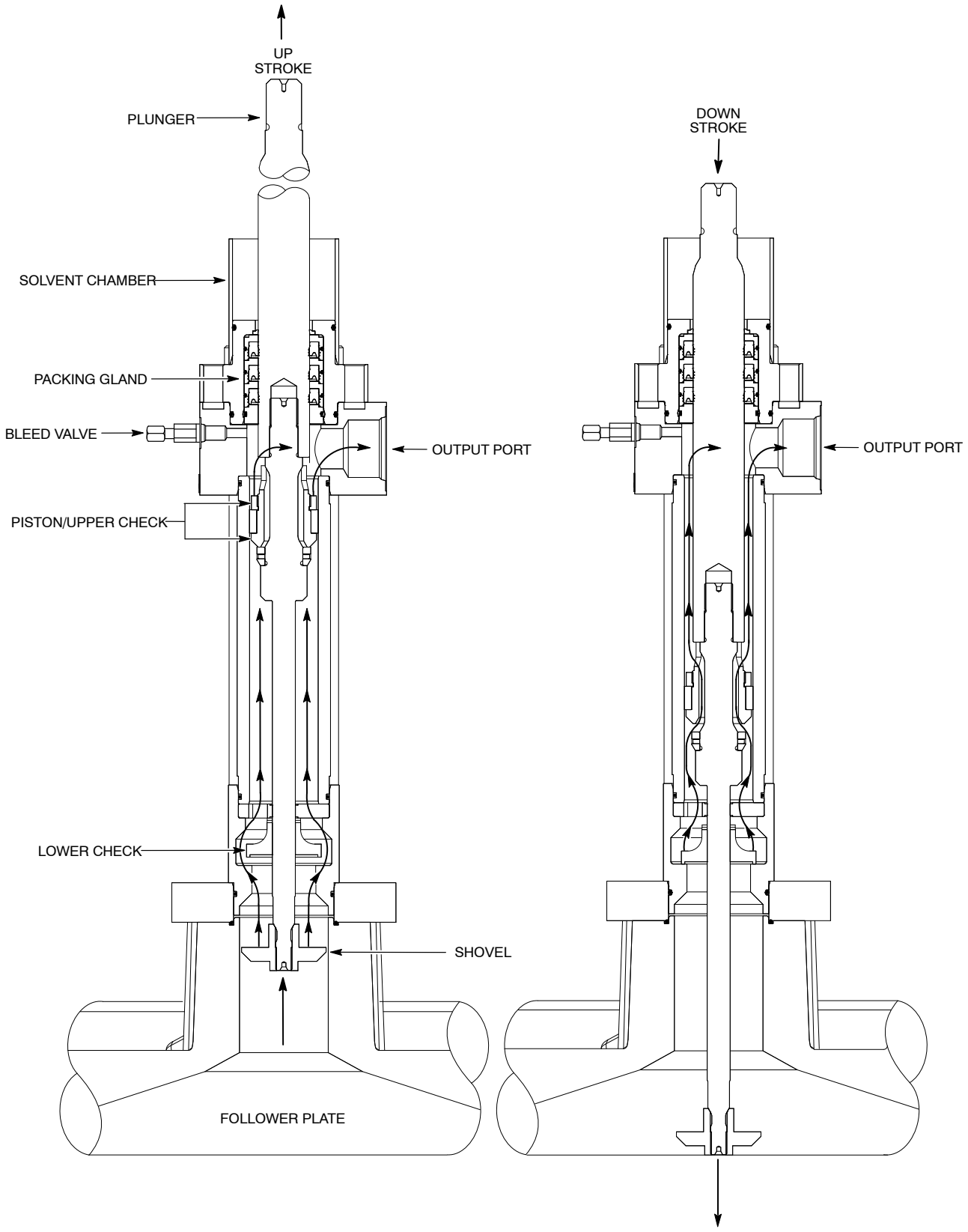

Figure 3 Standard and Temperature Conditioned Hydraulic Sections

© 2013 Nordson Corporation

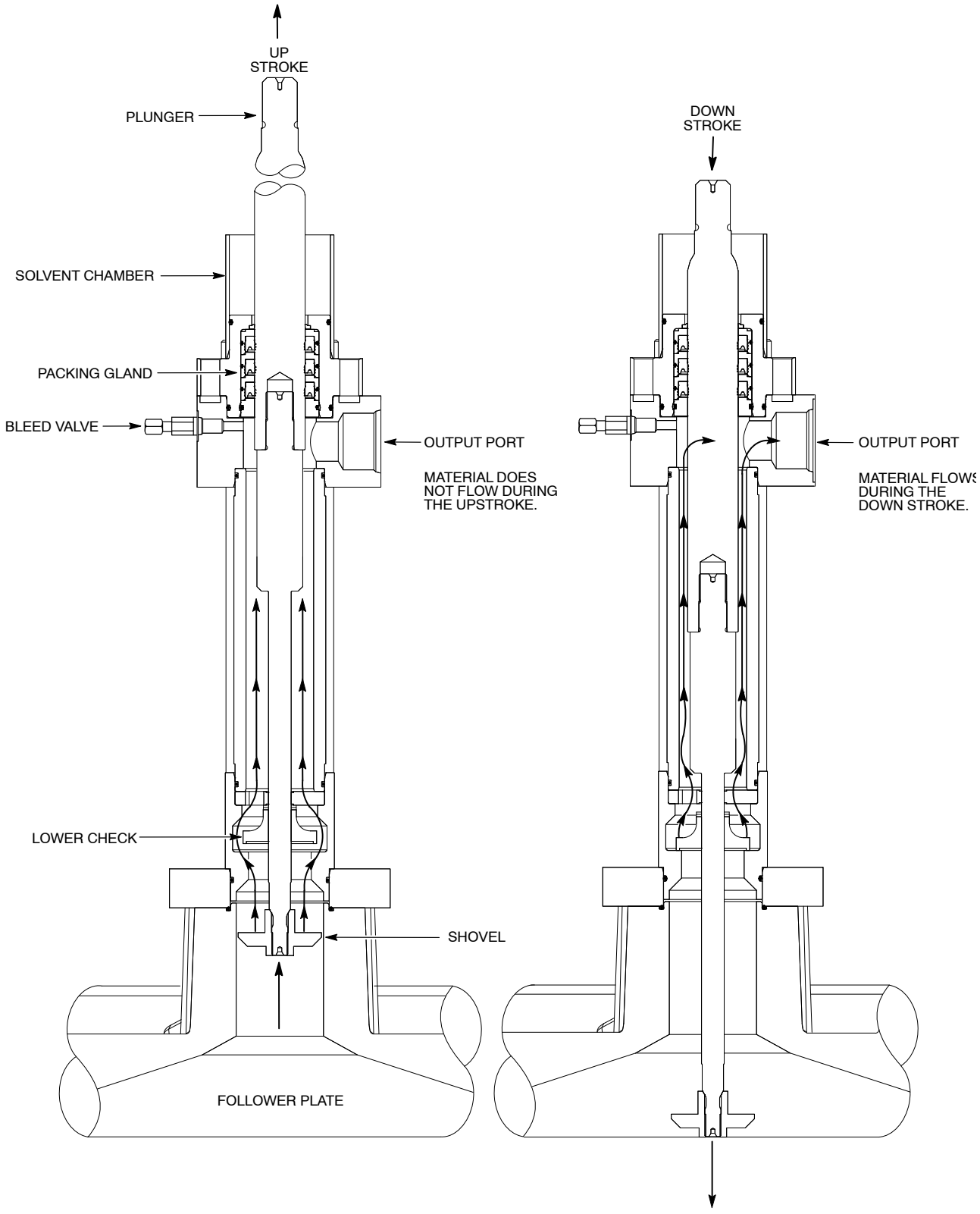

Figure 4 Stainless Steel Single-Acting Hydraulic Section

© 2013 Nordson Corporation

Repair

This section only covers the procedures necessary to perform shop repairs. Refer to the *Rhino SD2/XD2 Frames* manual for procedures on removing the pump from the bulk unloader.

WARNING: Allow only qualified personnel to perform the following tasks. Follow the safety instructions in this document and all other related documentation. Review the following:

- Relieve all pressure to the pump before performing repair procedures.
- Read and understand this entire section before repairing this equipment. Some repairs can be made without breaking down the pump.
- If necessary, contact a local Nordson representative with questions about these procedures.

Consumable Items

Keep the following on hand when repairing the pump.

Item	Part	Application
Never-Seez	900344	Apply to threads of applicable parts.
Threadlock Adhesive	900464	
Pipe/Thread Sealant	900481	
TFE Grease	1031834 (1-gal.) or 900349 (0.75 oz)	Lubricate air motor components.
O-Ring Lubricant	900223	Lubricate hydraulic section components.
Mobil SHC 634	156289	Lubricate stainless steel hydraulic section components.

© 2013 Nordson Corporation

Break Down the Pump

See Figure 5 and perform the desired procedure.

Repairs to the Hydraulic Section

1. Remove the screws (6) securing the coupling halves (7) to the floating coupling shaft (2) and plunger rod (3).
2. Remove the nuts (4) securing the hydraulic section (5) to the connecting rods (8).
3. Remove the hydraulic section from the pump assembly.
4. **TEMPERATURE CONDITIONED PUMPS:** Remove the cover (9) from the hydraulic section.
5. Refer to the *Hydraulic Section* procedures to perform the desired repairs.

Repairs to the Air Motor

1. Remove the screws (6) securing the coupling halves (7) to the floating coupling shaft (2) and plunger rod (3).
2. Remove the nuts (4) securing the hydraulic section (5) to the connecting rods (8).

CAUTION: The air motor is heavy. Have an assistant help with removing the air motor from the hydraulic section.

3. Remove the air motor (1) from the hydraulic section (5). Remove the connecting rods (8) from the air motor (1).
4. Refer to the *Air Motor* procedures to perform the desired repairs.

© 2013 Nordson Corporation

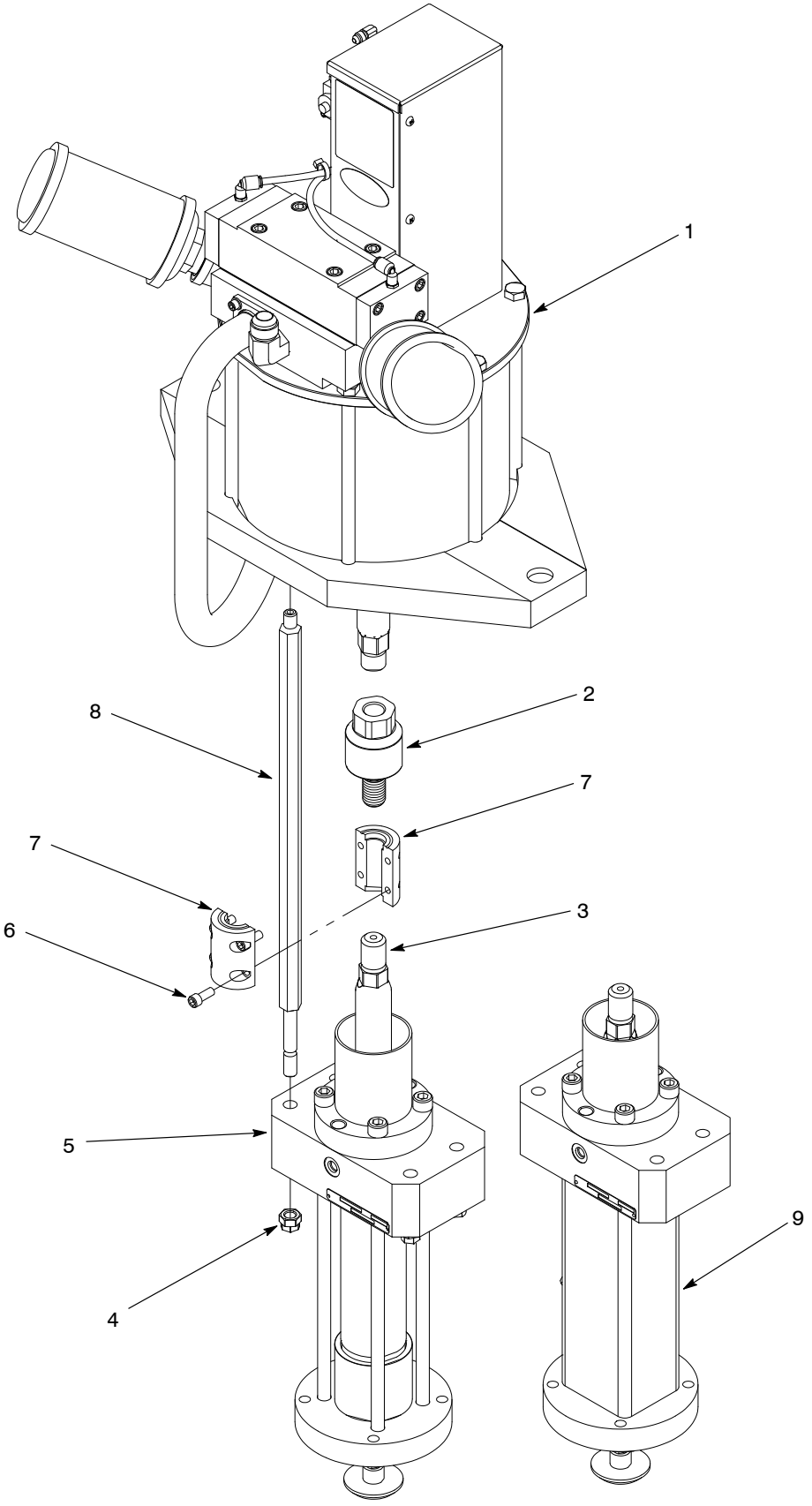

Figure 5 Typical Air Motor and Hydraulic Section

© 2013 Nordson Corporation

Standard and Temperature Conditioned Hydraulic Sections

The following paragraphs provide procedures for repairing a standard or temperature conditioned hydraulic section.

Disassemble the Hydraulic Section

1. See Figure 6. Remove the solvent chamber (1) and the O-ring (2) from the packing gland (4). Discard the O-ring.

NOTE: Packing glands have either 4 or 6 screws.

2. Perform the following:
   a. Remove the screws (3) from the packing gland (4). Insert two screws into the threaded holes (20) as shown.
   b. Alternate tightening the screws to remove the packing gland (4) from the upper pump body (5).
3. Remove the shovel adapter (18) from the rod assembly (10).

NOTE: Hydraulic sections have either 4 or 6 screws that secure the cylinder assembly to the upper pump body.

4. Remove the screws (19) securing the cylinder assembly and follower plate housing (17) to the upper pump body (5). Remove the follower plate housing.
5. Remove the bottom housing (15), O-ring (16), lower check plate (14), and spacer (13). Discard the O-ring.
6. Remove the cylinder housing (12) from the upper pump body (5). Remove and discard the O-rings (11) from the cylinder housing.

   TEMPERATURE CONDITIONED SECTIONS: It is not necessary to remove the coil (25) unless it or the cylinder housing needs to be replaced.
7. Using either an arbor press or hydraulic press, push the plunger rod (6) out of the cylinder housing (12).
8. Remove the rod assembly from the plunger rod (6). Remove and discard the piston assembly (9).
9. Clean the parts with a compatible solvent. Refer to Table 4 in the *Specifications* section for wetted component materials.
10. Inspect parts for nicks, scratches, wear, and damage. Replace parts if necessary.
11. Rebuild the packing gland (4) if necessary. Refer to the *Rebuild the Packing Gland* procedure in this section for procedures.

Assemble the Hydraulic Section

1. See Figure 6. Apply O-ring lubricant (23) to the packing gland O-ring (2) and the packing gland I.D. (21).
2. Install the packing gland (4) into the upper pump body (5).
3. Apply Never Seez (22) to the threads of the screws (3). Install the screws into the packing gland (4) and tighten to 102–108 N•m (75–80 ft-lb).
4. **TEMPERATURE CONDITIONED SECTIONS:** Install the coil (25) onto the cylinder housing (12) if necessary.
5. Apply O-ring lubricant (23) to the O-rings (11) and I.D. of the cylinder housing (12). Install the O-rings onto the cylinder housing. Install the cylinder housing onto the upper pump body (5).
6. Assemble the plunger rod assembly:
   a. Install the piston assembly (9) onto the rod assembly (10).
   b. Apply Never Seez (22) to the upper threads and pilot of the rod assembly. Connect the rod assembly to the plunger rod (6) and tighten to 272–298 N•m (200–220 ft-lb).
   c. Apply a thin coat of O-ring lubricant (23) to the plunger rod, piston assembly, and the rod assembly.
7. Using either an arbor press or hydraulic press, install the plunger rod assembly through the cylinder housing (12) and packing gland (4).
8. Install the spacer (13) and lower check plate (14) onto the rod assembly.
9. Install the bottom housing (15) onto the cylinder housing (12). Apply O-ring lubricant (23) to the O-ring (16) and install it onto the bottom housing.
10. Install the follower plate housing (17) onto the bottom housing (15).

NOTE: Hydraulic sections have either 4 or 6 screws that secure the cylinder assembly to the upper pump body.

11. Apply Never Seez (22) to the threads of the screws (19). Perform the following:
    a. Install the screws through the follower plate housing (17) and into the upper pump body (5).
    b. Hand-tighten two opposing screws at the same time until the follower plate housing, bottom housing, and cylinder housing (12) are secured to the upper pump body (5). Hand-tighten the remaining screws as shown.
    c. After performing step 10b, simultaneously tighten each screw 1/8 turn at a time in the sequence shown to 102–108 N•m (75–80 ft-lb).
12. Apply threadlock adhesive (24) to the lower threads of the rod assembly. Install the shovel adapter (18) to the rod assembly and tighten to 75–81 N•m (55–60 ft-lb).
13. Install the solvent chamber cup (1) onto the packing gland (4).

© 2013 Nordson Corporation

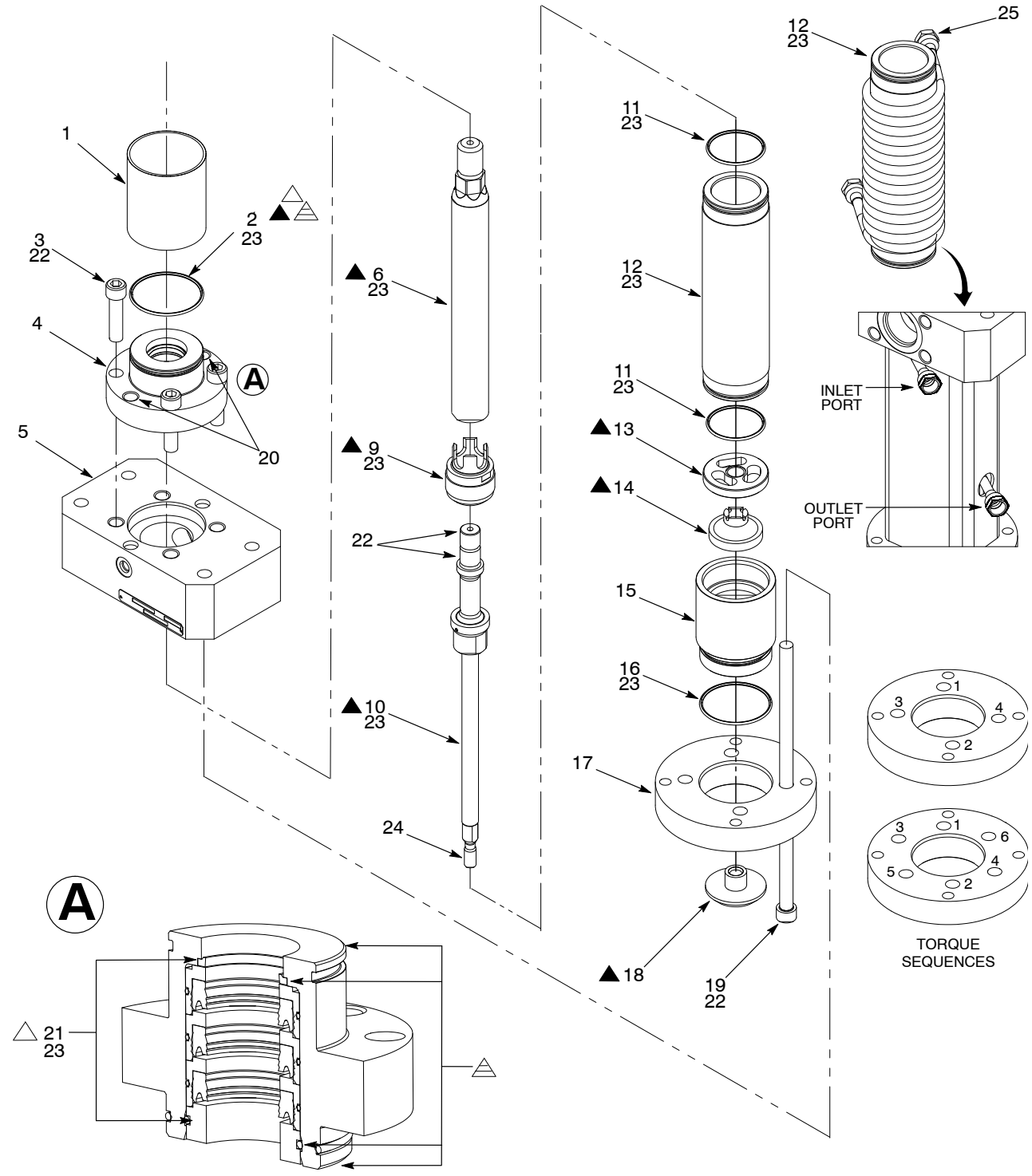

▲ PARTS ARE INCLUDED IN THESE KITS:
SD2 5.8 CUBIC INCH DRIVE TRAIN SERVICE KIT 1105066
XD2 5.8 CUBIC INCH DRIVE TRAIN SERVICE KIT 1105065
SD2 8.1 CUBIC INCH DRIVE TRAIN SERVICE KIT 1105067
XD2 8.1 CUBIC INCH DRIVE TRAIN SERVICE KIT 1105068

△ PARTS ARE INCLUDED IN THESE KITS:
5.8 CUBIC INCH PACKING GLAND SERVICE KIT 1104726
8.1 CUBIC INCH PACKING GLAND SERVICE KIT 1104731

△ PARTS ARE INCLUDED IN THESE KITS:
5.8 CUBIC INCH PACKING GLAND INTERNAL PARTS SERVICE KIT 1081134
8.1 CUBIC INCH PACKING GLAND INTERNAL PARTS SERVICE KIT 1081135

Figure 6 Standard Hydraulic Section Repairs

© 2013 Nordson Corporation

Rebuild the Packing Gland

NOTE: This procedure requires the use of either a hydraulic or an arbor press to remove the internal parts of the packing gland.

1. See Figure 7. Place the packing gland housing (2) on a fixture (5) with the solvent cup end facing up.

NOTE: During removal of the internal parts, the retainer groove will break the O-ring (4).

2. Insert the removal arbor (1) into the packing gland housing. Using the press, push out the internal parts (3).
3. Thoroughly clean the packing gland housing in a compatible solvent to remove all sealant material and O-ring debris.
4. Coat the bore (8) of the packing gland housing with O-ring lubricant (9).
5. Insert the scraper or retaining ring (7), sharp edge down, into the the packing gland (2).
6. Using the insertion tool (6) and press, insert the new internal parts into the packing gland housing (2). Make sure that the brass seal retainer or backup washer (10) is flush or slightly below the packing gland housing as shown.

© 2013 Nordson Corporation

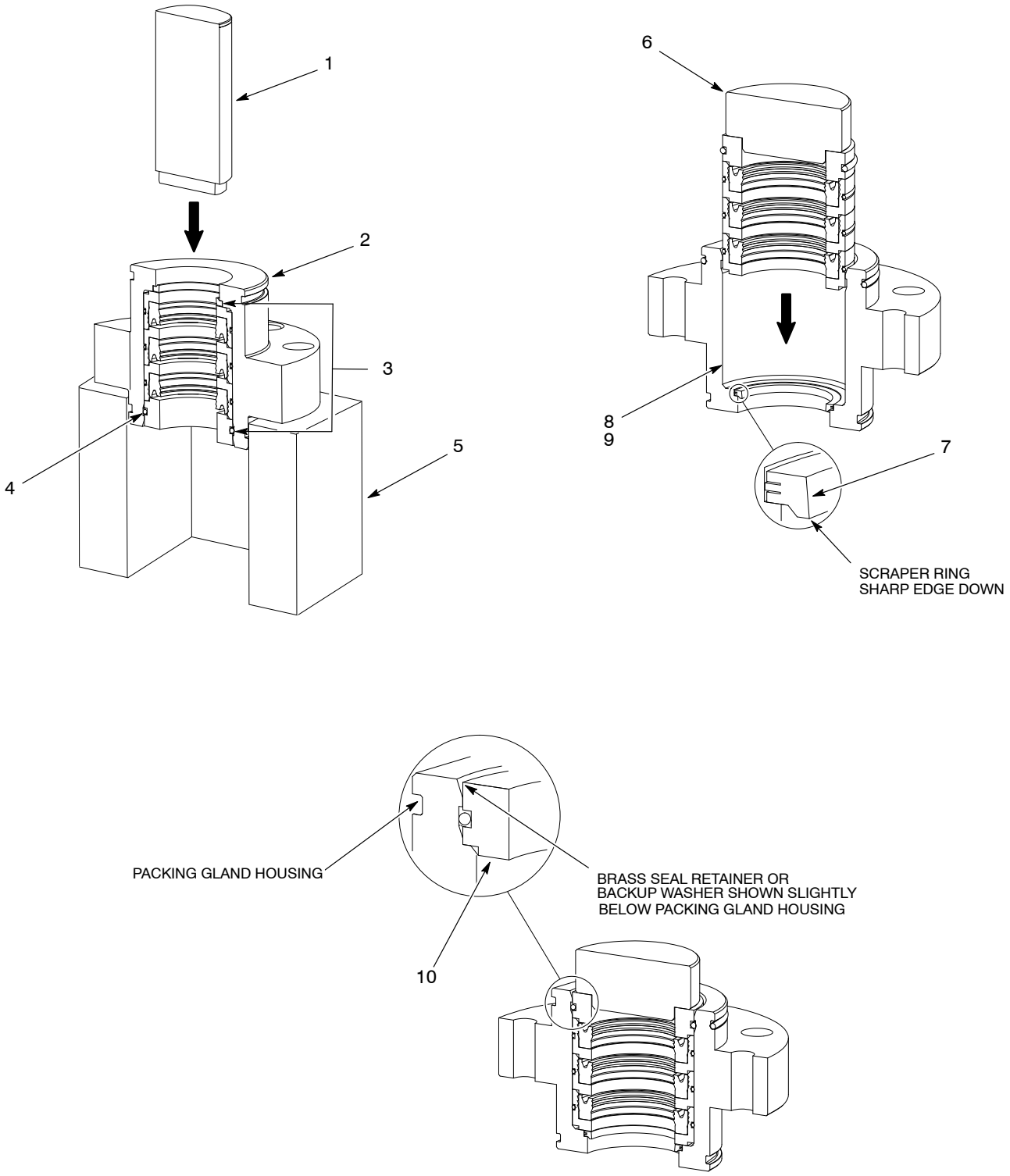

Figure 7 Typical Packing Gland Internal Parts Replacement

© 2013 Nordson Corporation

Stainless Steel Hydraulic Section

The following paragraphs provide procedures for repairing the stainless steel hydraulic section.

Disassemble the Hydraulic Section

1. See Figure 8. Remove the solvent chamber (1) and the O-ring (2) from the packing gland (5). Discard the O-ring.
2. Remove the packing gland assembly:
   a. Remove the screws (3) from the collar (4). Insert two screws into the threaded holes (9) as shown.
   b. Alternate tightening the screws to remove the packing gland assembly from the upper pump body (8).
   c. Loosen the set screws (6) and remove the packing gland (5) from the collar (4).
   d. Remove the fittings (7) from the packing gland.
3. Remove the shovel adapter (20) from the shovel rod (12).
4. Remove the screws (21) securing the cylinder assembly and follower plate housing (19) to the upper pump body (8). Remove the follower plate housing.
5. Remove the bottom housing (17), O-ring (18), lower check plate (16), and spacer (15). Discard the O-ring.
6. Remove the cylinder housing (13) from the upper pump body (8). Remove and discard the O-rings (14) from the cylinder housing.
7. Remove the shovel rod (12) from the plunger rod (11).
8. Clean the parts with a compatible solvent. Refer to Table 4 in the *Specifications* section for wetted component materials.
9. Inspect parts for nicks, scratches, wear, and damage. Replace parts if necessary.

Assemble the Hydraulic Section

1. See Figure 8. Apply threadlock adhesive (10) to the threads of the fittings (7). Install the fittings into the packing gland (5) and tighten securely.
2. Apply Mobil SHC 634 lubricant (22) to the packing gland O-ring (2) and the I.D. of the packing gland (5).
3. Install the upper collar (4) onto the packing gland (5). Tighten the set screws (6) until they make contact with the packing gland. Do not over tighten the set screws.
4. Install the packing gland assembly onto the body (8).
5. Apply Never Seeze (23) to the threads of the screws (3). Install the screws into the packing gland assembly and tighten to 102–108 N•m (75–80 ft-lb).
6. Apply Mobil SHC 634 lubricant (22) to the cylinder housing O-rings (14). Install the O-rings onto the cylinder housing (13). Install the cylinder housing onto the upper pump body (8).
7. Assemble the plunger rod assembly:
   a. Apply Never Seez (23) to the upper threads and pilot of the shovel rod (12).
   b. Connect the shovel rod to the plunger rod (11) and tighten to 272–298 N•m (200–220 ft-lb).
   c. Apply a thin coat of Mobil SHC 634 lubricant (22) to the plunger rod (11) and the shovel rod (12).
8. Using either an arbor press or hydraulic press, install the plunger rod assembly into the cylinder housing (13) and packing gland (5).
9. Install the spacer (15) and lower check plate (16) onto the rod assembly.
10. Install the bottom housing (17) onto the cylinder housing (13). Apply Mobil SHC 634 lubricant (22) to the O-ring (18) and install it onto the bottom housing.
11. Install the follower plate housing (19) onto the bottom housing (17).
12. Apply Never Seez (23) to the threads of the screws (21). Perform the following:
    a. Install the screws through the follower plate housing (19) and into the upper pump body (8).
    b. Hand-tighten two opposing screws at the same time until the follower plate housing, bottom housing (17), and cylinder housing (13) are secured to the upper pump body (8). Hand-tighten the remaining screws as shown.
    c. After performing step 12b, simultaneously tighten each screw 1/8 turn at a time in the sequence shown to 102–108 N•m (75–80 ft-lb).
13. Apply Never Seez (23) to the lower threads of the rod assembly. Install the shovel adapter (20) to the rod assembly and tighten to 75–81 N•m (55–60 ft-lb).
14. Install the solvent chamber cup (1) onto the packing gland assembly.

© 2013 Nordson Corporation

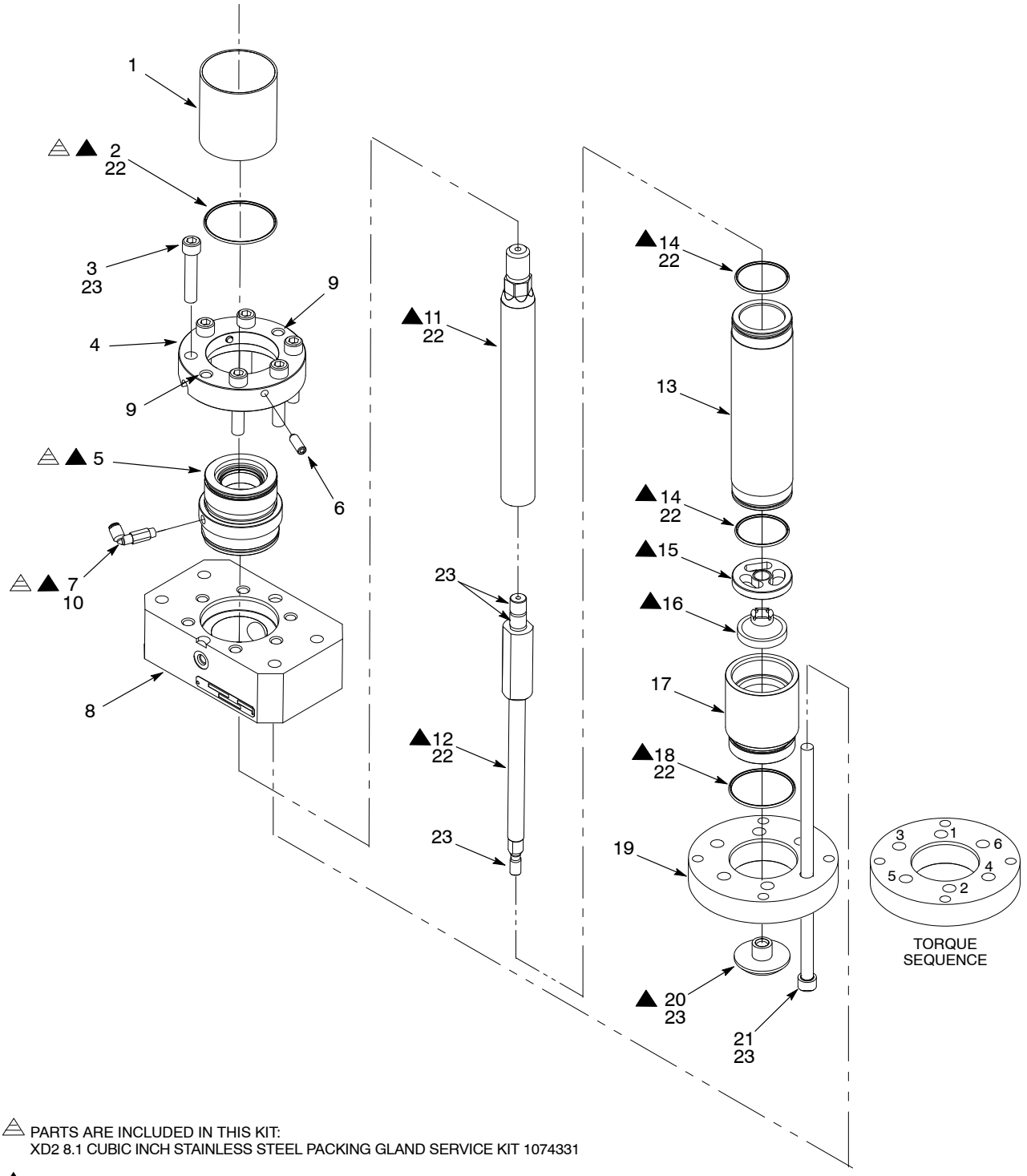

△ PARTS ARE INCLUDED IN THIS KIT:
XD2 8.1 CUBIC INCH STAINLESS STEEL PACKING GLAND SERVICE KIT 1074331

▲ PARTS ARE INCLUDED IN THIS KIT:
XD2 8.1 CUBIC INCH ARW STAINLESS STEEL DRIVE TRAIN SERVICE KIT 1074332

Figure 8 Stainless Steel Hydraulic Section Repairs

© 2013 Nordson Corporation

Air Motor

The following paragraphs provide repair procedures for the air motor section.

Replace the Trip-Rod U-Cup

The trip-rod U-cup can be replaced without removing the air motor from the pump.

Remove the Trip-Rod U-Cup

1. See Figure 9. Remove the screws (2) securing the cover (1) to the trip-rod assembly (6).
2. Remove the screws (5) and washers (4) securing the trip-lever mounting pad (15) to the trip-rod assembly (6).
3. Swing the trip-lever mounting pad (15) away from the seal retainer plate (11).
4. Place a wrench on the flats of the piston rod (13). Remove the nut (7) securing the trip-bar (8) to the piston rod.
5. Remove the screws (9) and washers (10) securing the seal retainer plate (11) to the trip-rod retainer (12).

   ! CAUTION !

   Use a small screwdriver or an O-ring pick in the next step to prevent damage to the U-cup bore and piston rod.

6. Remove the U-cup (14) from the trip-rod retainer (12). Discard the U-cup.

Install the Trip-Rod U-Cup

1. See Figure 9. Lubricate the new U-cup (14) with TFE grease (16). Insert the U-cup into the trip-rod retainer (12) as shown.
2. Install the seal retainer plate (11) onto the trip-rod retainer (12) using the screws (9) and washers (10). Tighten the screws to 22–25 ft-lb (30–33 N•m).
3. Place a wrench on the flats of the piston rod (13). Install the trip-bar (8) to the piston rod using the nut (7). Tighten the nut securely.
4. Perform the following:
   a. Make sure that the mounting pad pins (3) protrude through the trip-rod assembly (6) as shown.
   b. Secure the trip-lever mounting pad (15) to the trip-rod assembly using the screws (5) and washers (4). Tighten the screws to 22–25 ft-lb (30–33 N•m).
5. Install the cover (1) to the trip-rod assembly using the screws (2). Tighten the screws securely.

© 2013 Nordson Corporation

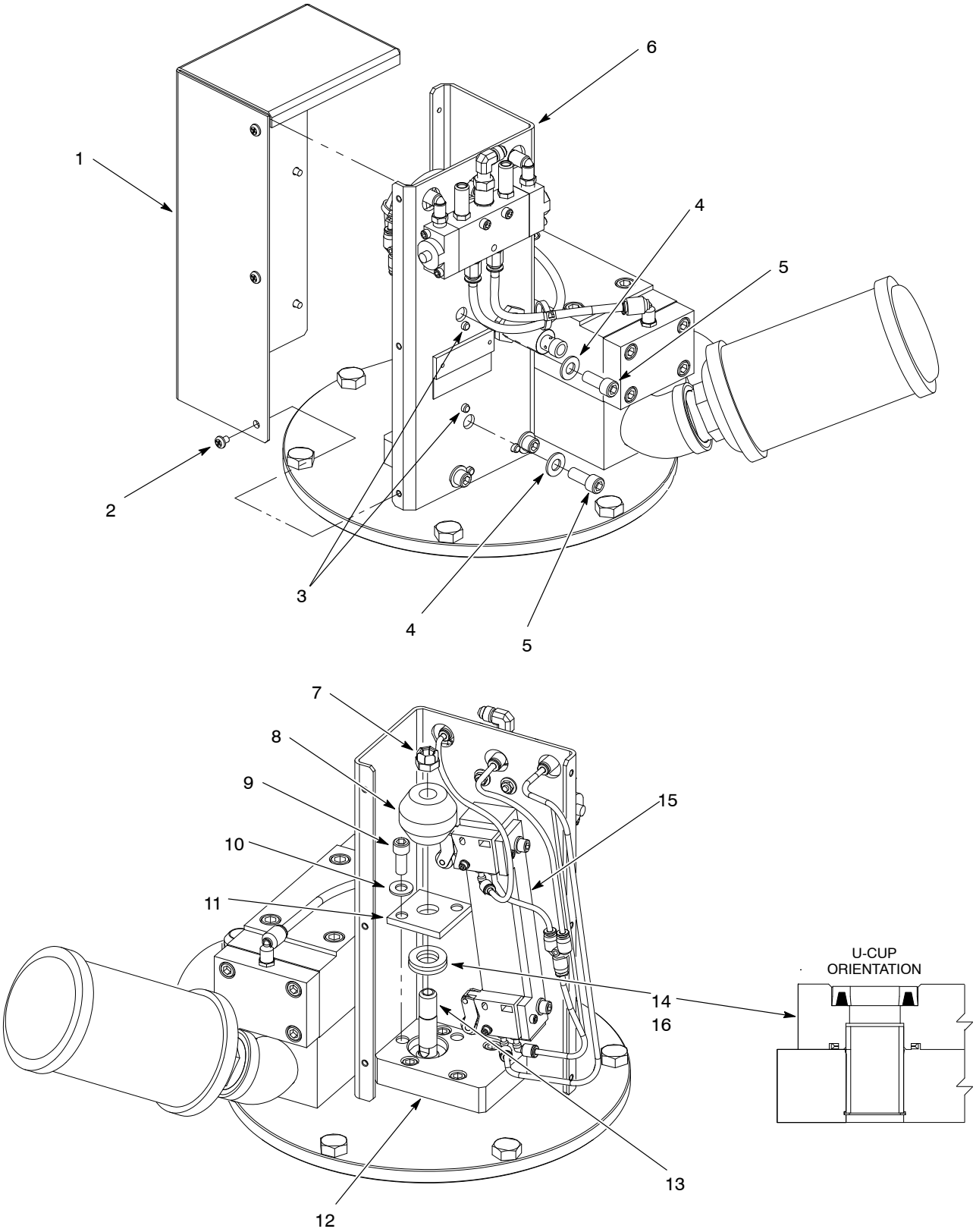

Figure 9 Replacing the Trip-Rod U-Cup

Replace a Pilot Valve

The pilot valves can be replaced without removing the air motor from the pump.

Remove and Install a New Pilot Valve

1. See Figure 10. Remove the screws (1) securing the cover (2) to the trip-rod assembly (3).
2. Disconnect the tubing (4, 5 or 6, 7) from the pilot valve (9 or 13).
3. Remove the screw (11) and washer (10) securing the pilot valve (9 or 13) to the mounting pad (8).
4. Install the pilot valve (9 or 13) to the mounting pad (8) using the washer (10) and screw (11). Thread the screw into the mounting pad. Do not tighten the screw at this time.

Adjust the New Pilot Valve

1. Cycle the air motor:
   a. **Upper Pilot Valve**—Cycle the air motor until the trip-bar (12) is fully extended.
   b. **Lower Pilot Valve**—Cycle the air motor until the trip-bar (12) is fully retracted.
2. Set the gap between the roller lever on the pilot valve (9 or 13) and the trip-bar (12):
   a. Make sure that pilot valve moves freely and that the roller lever is bottomed out.
   b. Using the adjustment set screw, move the pilot valve in or out to obtain a gap of 0.040–0.070 in. (1.02–1.78 mm) between the roller lever on the pilot valve and the trip-bar. Tighten the hold-down screw securely.
3. Connect the tubing (4, 5 or 6, 7) to the pilot valve (9 or 13). See Figure 25 in the *Specifications* section for the proper tube routings.
4. Install the cover (1) to the trip-rod assembly using the screws (2). Tighten the screws securely.

© 2013 Nordson Corporation

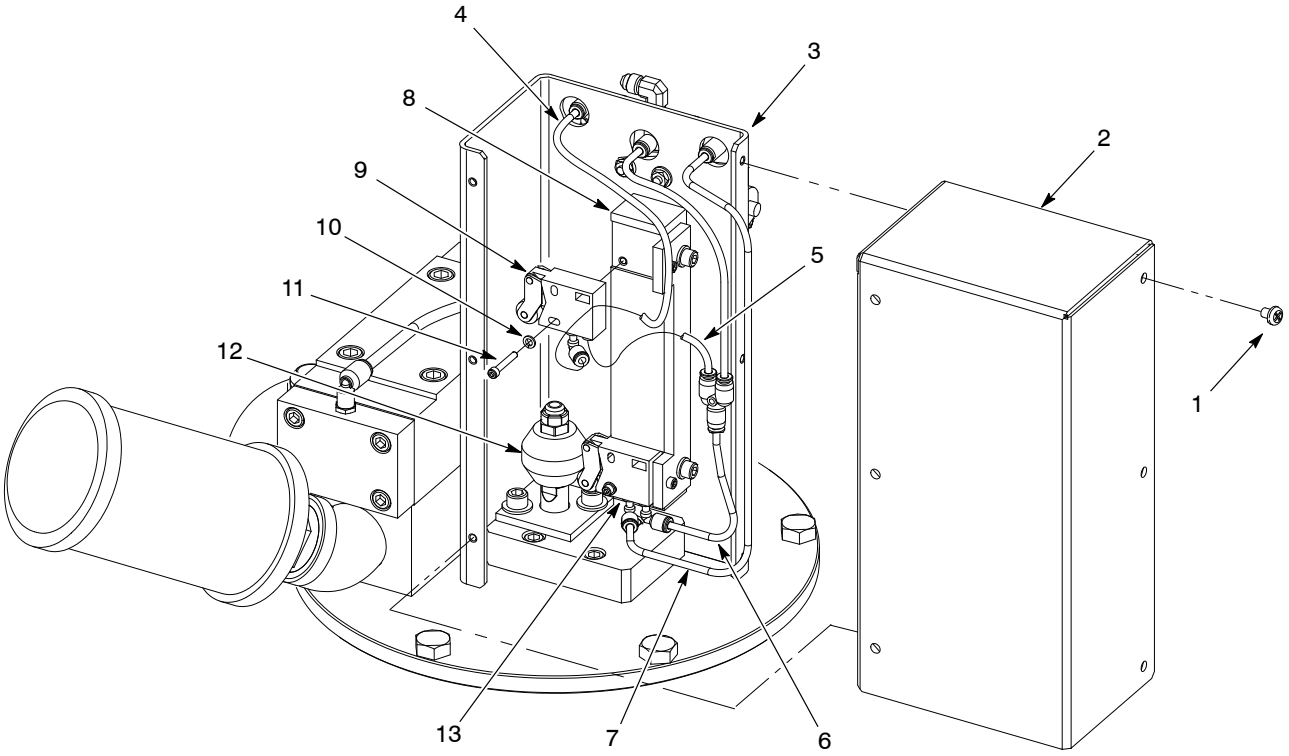

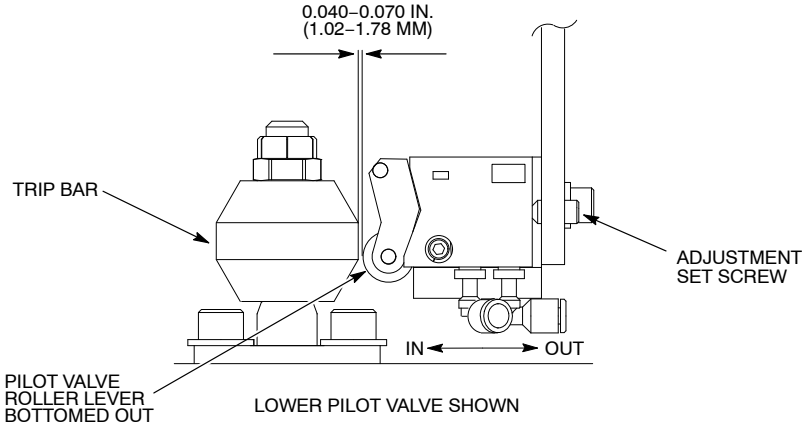

Figure 10 Replacing a Pilot Valve

© 2013 Nordson Corporation

Replace the Supply Tube Quad- and O-Rings

Use the following procedure to replace the supply tube quad- and O-rings.

Remove the Supply Tube Quad- and O-Rings

1. See Figure 11. Remove the screws (4) and washers (5) securing the upper supply tube retainer (3) to the air manifold (1).
2. Remove the screws (11) and washers (10) securing the lower supply tube retainer (9) to the base plate (18).
3. Remove the supply tube (6) from the air manifold (1) and base plate (18).
4. Remove the upper and lower retainers (3, 9) from the supply tube and clean them in a compatible solvent if necessary.
5. Remove the O-ring (2) from the air manifold (1). Remove the Quad-rings (7) and O-ring (8) from the base plate (18). Discard the Quad- and O-rings.

Install the Supply Tube Quad- and O-Rings

1. See Figure 11. Lubricate the Quad-rings (7) and O-rings (8) with TFE grease. Install the Quad-rings and O-ring into the base plate (18) as shown.
2. Install the lower retainer to the base plate (18) using the washers (10) and screws (11). Only finger tighten the screws at this time.
3. Lubricate the air manifold O-ring (2) with TFE grease and install it into the air manifold (1).
4. Install the upper retainer (3) onto the air supply tube (6).
5. Carefully insert the bottom portion of the air supply tube (6) through the lower retainer (9) and into the base plate (18).
6. Carefully insert the upper portion of the air supply tube (6) into the air manifold (1).
7. Secure the upper retainer (3) to the air manifold (1) using the screws (4) and washers (5). Tighten the screws to 10–12 ft-lb (13–16 N•m).
8. Tighten the lower retainer screws (11) to 10–12 ft-lb (13–16 N•m).

Replace the Piston Rod Retainer U-Cup and O-Ring

1. See Figure 11. Remove the screws (13) and washers (14) securing the piston rod retainer (15) to the base plate (17).
2. Remove the O-ring (16) and U-cup (12) from the piston rod retainer (15). Discard the O-ring and U-cup.
3. Lubricate the new O-ring (16) and U-cup (12) with TFE grease. Insert the O-ring and U-cup into the piston rod retainer (15) as shown.
4. Install the piston rod retainer (15) onto the base plate (17) using the screws (13) and washers (14). Tighten the screws to 22–25 ft-lb (30–33 N•m).

© 2013 Nordson Corporation

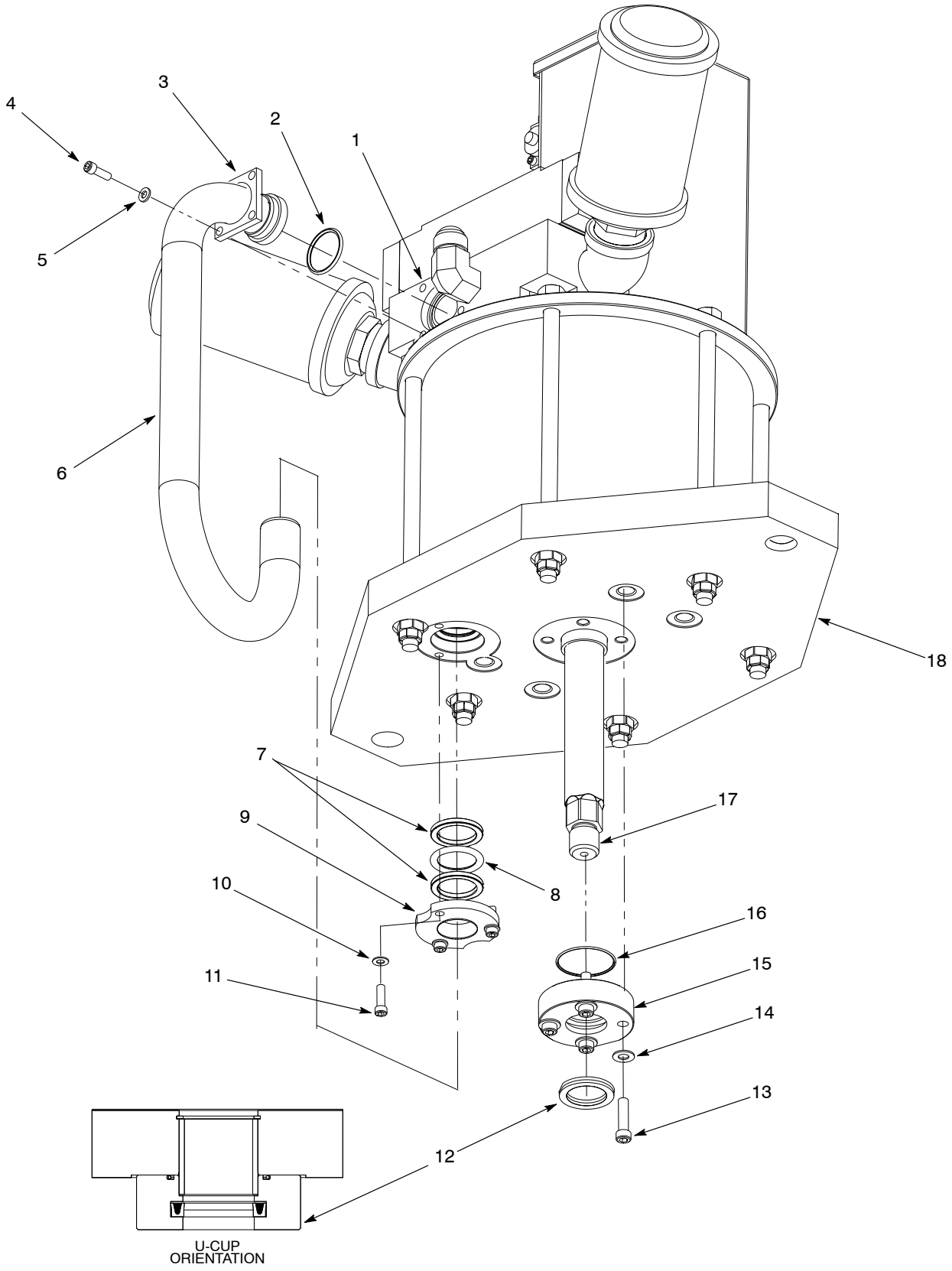

Figure 11 Replacing the Base Plate Seals and Rings

© 2013 Nordson Corporation

Replace the Piston Assembly

Use the following procedure to replace the piston assembly.

Remove the Piston Assembly

1. See Figure 12. Remove the screws (1) securing the trip-rod assembly cover (2).
2. Place a wrench on the flats of the piston rod (5).
3. Remove the nut (3) securing the trip-bar (4) to the piston rod (5).
4. See Figure 13. Remove the screws (6) and washers (7) securing the upper supply tube retainer (5) to the air manifold (2).
5. Loosen the lower supply tube retainer screws (9).
6. Remove the supply tube (8) from the air manifold (2) and base plate (17). Remove and discard the O-ring (4) from the air manifold (2).
7. Remove the screws (13) and washers (14) securing the piston rod retainer (15) to the base plate (17). Remove the O-ring (11) and U-cup (12). Discard the O-ring and U-cup.
8. Remove the screws (1) and nuts (16) securing the air motor cap (18) to the base plate (17). Use a wrench on the flats of the two screws (3) below the air manifold (2) to remove the nuts.
9. Remove the air motor cap (18) and set it on a flat surface. Remove and discard the air motor cap O-ring (19).
10. Remove the air cylinder (20) and O-ring (19) from the base plate (17). Discard the O-ring. Remove the piston assembly from air cylinder.
11. Remove the nut (21) securing the piston (22) to the piston rod (10). Remove the O-ring (23) from the piston rod and discard.

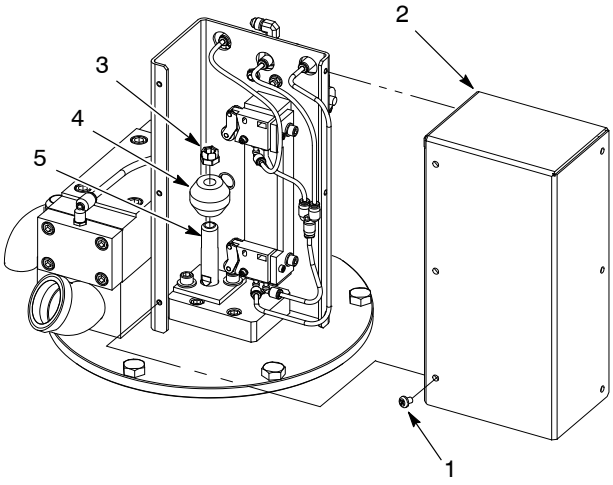

Figure 12 Removing the Trip-Rod Cover

Install the Piston Assembly

1. See Figure 13. Apply TFE grease to the following parts:
   - inner surface of the air cylinder (20)
   - piston (22)
   - O-rings (4, 11, 19, 23)
   - U-cup (12)
2. Install the O-ring (23) onto the piston rod (10).
3. Apply Loctite 242 (24) to the upper threads of the piston rod (10). Install the piston (22) onto the piston rod. Install the nut onto the piston rod and tighten to 200–220 ft-lb (271–298 N•m).
4. Assemble the piston assembly and air cylinder (20):
   a. Insert the piston assembly into the air cylinder at a 20–30 degree angle to ensure that there is an equal amount of grease on each side of the piston. When the piston reaches the middle of the air cylinder, rotate it to the proper position.
   b. Apply TFE grease to the piston rod (10).
5. Install the O-rings (19) onto the base plate (17) and air motor cap (18).
6. Install the air cylinder/piston assembly onto the base plate (17).
7. Install the air motor cap (18) onto the air cylinder (20) using the screws (1, 3). Perform the following:
   a. Install the nuts (16) onto the screws.
   b. Hand-tighten two opposing screws at the same time until the air motor cap is secured to the base plate.
   c. After performing step 7b, secure the air motor cap to the base plate by tightening the screws in the sequence shown to 30–35 N•m (41–47 ft-lb).
8. Insert the O-ring (11) and U-cup (12) into the piston rod retainer (15) as shown.
9. Install the piston rod retainer (15) onto the base plate (17) using the screws (13) and washers (14). Tighten the screws to 22–25 ft-lb (30–33 N•m).
10. Carefully insert the bottom portion of the air supply tube (8) through the lower retainer (9) and into the base plate (17).
11. Carefully insert the upper portion of the air supply tube (8) into the air manifold (2).
12. Secure the upper retainer (5) to the air manifold (2) using the screws (6) and washers (7). Tighten the screws to 10–12 ft-lb (13–16 N•m).
13. Tighten the screws on the lower retainer (9) to 10–12 ft-lb (13–16 N•m).
14. See figure 12. Install the trip-bar (4) to the piston rod (5) using the nut (3). Tighten the nut securely.
15. Install the cover (2) to the air motor using the screws (1). Tighten the screws securely.

© 2013 Nordson Corporation

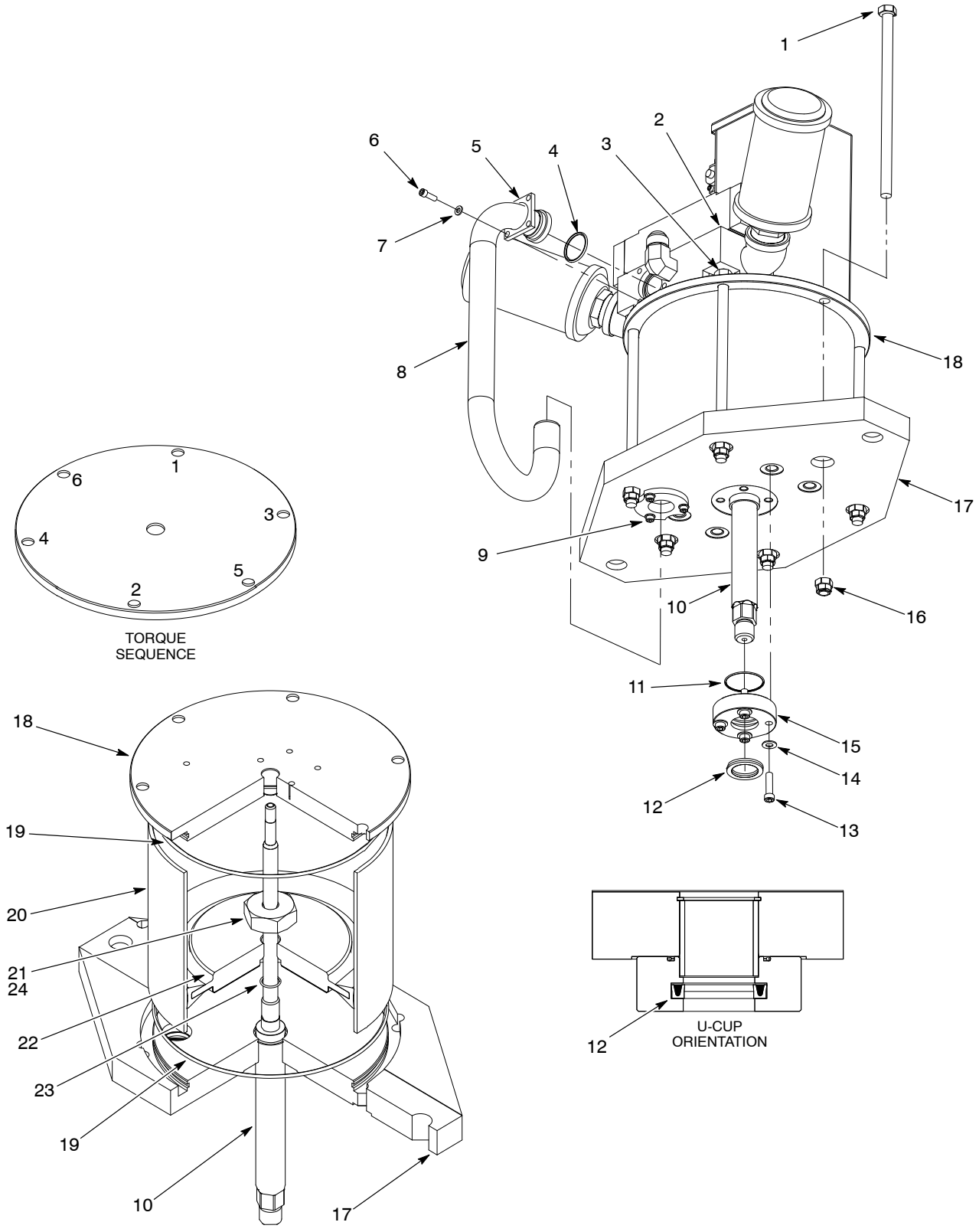

Figure 13 Replacing the Piston

Assemble the Pump

1. See Figure 14. Apply threadlock adhesive to the male threads of the air motor shaft (2). Install the floating coupling shaft (3) onto the air motor shaft and tighten to 200–220 ft-lb (272–298 N•m).
2. Install the connecting rods (10) to the air motor (1) and tighten to 60–65 ft-lb (81.5–88 N•m).
3. Install the hydraulic section (7) onto the connecting rods (10) using the nuts (6). Tighten the nuts to 60–65 ft-lb (81.5–88 N•m).
4. Install the solvent chamber (5) onto the hydraulic section (7).

NOTE: The split coupler halves are a matched set. Each half is stamped with the same serial number. Make sure that grooved end of each half is facing upward.

5. If necessary, use the manual overrides (11) to cycle the air motor (1) and position the floating coupling shaft (3) closer to the plunger rod (4).
6. Perform the following:
   a. Center the split coupler halves (9) between the hexagonal features of the two mating shafts.
   b. Make sure that there is a 0.030–0.100 in gap between the shaft ends as shown when the shaft threads and the split coupler threads mate.
   c. For fine adjustment of the gap, hold the split coupler in place and use a $^{15}/_{16}$-in wrench to rotate the floating coupling shaft (3).

NOTE: When performing the next step make sure that the gaps between the split coupler halves are equal.

7. Apply threadlock adhesive to the threads of the split coupler screws (8). Install the coupler screws and tighten to 14–16 ft.-lb (10–21 N•m).
8. Perform one of the following:

   STANDARD HYDRAULIC SECTIONS: Using Type-K solvent, fill the solvent chamber to 0.75 in. from the top.

   STAINLESS STEEL HYDRAULIC SECTIONS: Using Mobil SHC 634, fill the solvent chamber to 0.75 in. from the top.

© 2013 Nordson Corporation

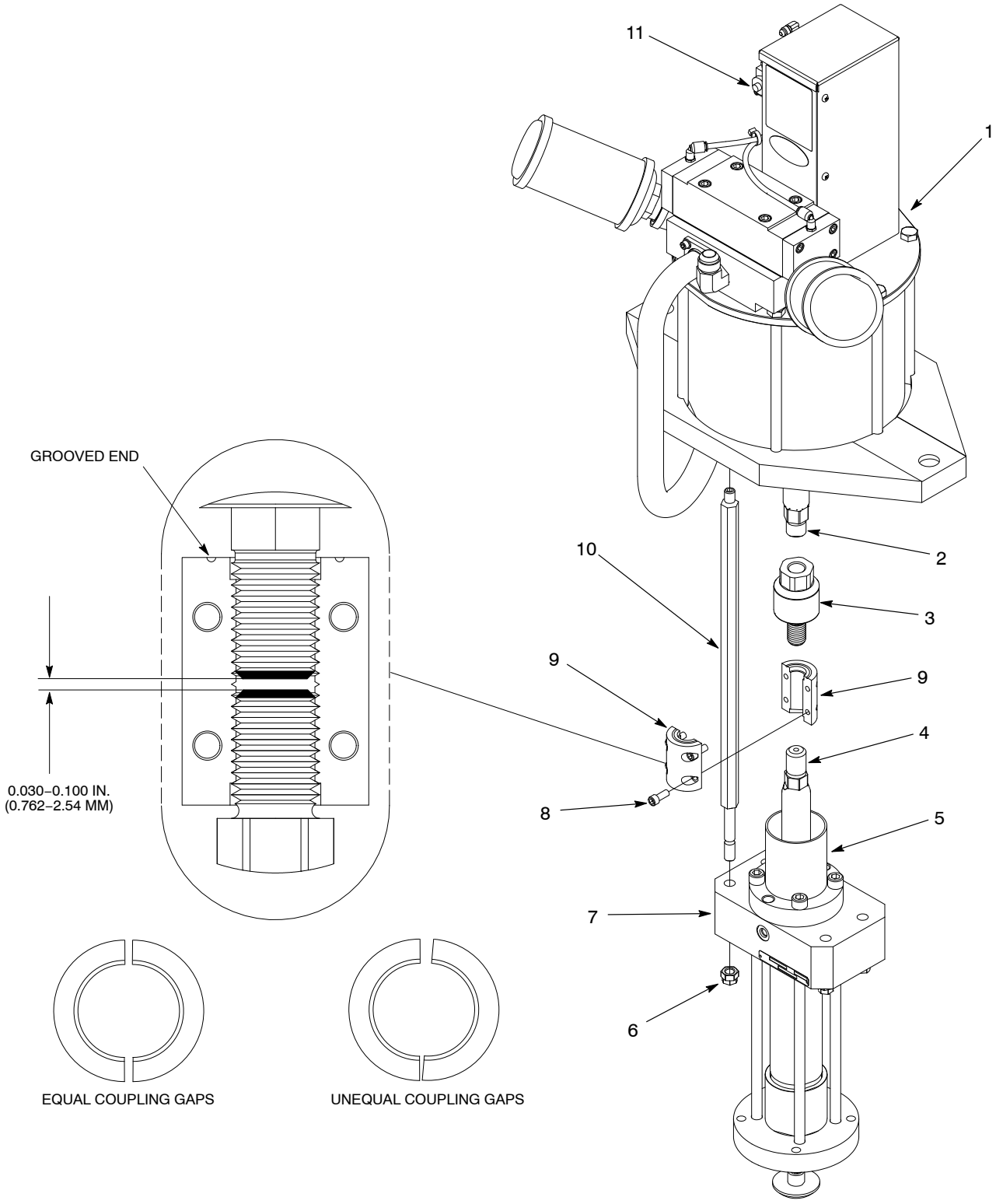

Figure 14 Assembling the Pump

Parts

Table 2 lists the air motor and hydraulic section sizes along with the part numbers for the applicable pump ratio. Refer to the *Air Motor* and *Hydraulic Sections* parts lists for detailed ordering information.

To order parts, call the Nordson Customer Service Center or your local Nordson representative.

Table 2 Air Motor and Hydraulic Section Sizes

Pump Ratio	Air Motor Size (Part Number)	Hydraulic Section Size (Part Number)
48:1 SD2	10-Inch NPT Port (1077362)	8.1 cu. in. (1081133)
48:1 SD2 Temp. Cond.		8.1 cu. in. (1085369)
48:1 XD2		8.1 cu. in. (1081132)
48:1 XD2 Stainless Steel		8.1 cu. in. (1058351)
48:1 XD2 Temp. Cond.		8.1 cu. in. (1085368)
65:1 SD2		5.8 cu. in. (1081130)
65:1 SD2 Temp. Cond.		5.8 cu. in. (1085367)
65:1 XD2		5.8 cu. in. (1081131)
65:1 XD2 Temp. Cond.		5.8 cu. in. (1084888)

Common Parts

See Figure 15 and the following parts list.

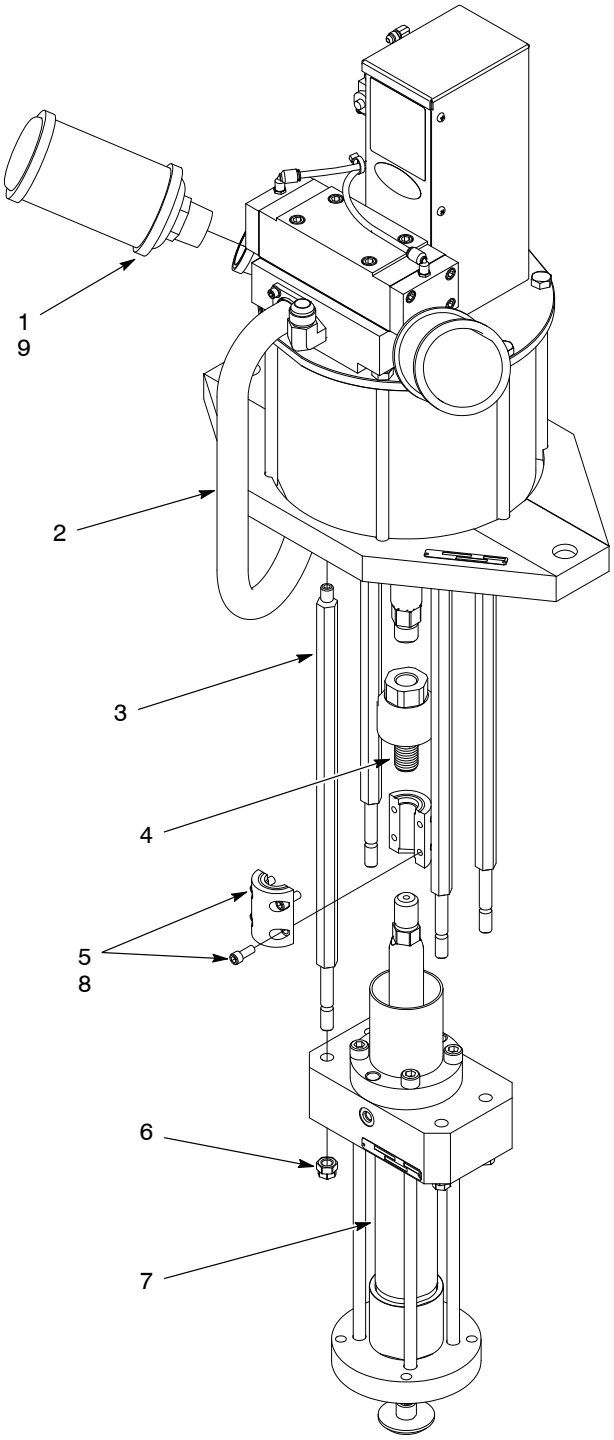

Figure 15 Common Parts

© 2013 Nordson Corporation

Item	Part	Description	Qty	Note
—	1073854	Pump, air motor assembly, 48:1, 8.1 cubic inch, SD2	1	
—	1073857	Pump, air motor assembly, 48:1, 8.1 cubic inch, XD2	1	
—	1085363	Pump, air motor assembly, 48:1, 8.1 cubic inch, SD2, T/C	1	
—	1085364	Pump, air motor assembly, 48:1, 8.1 cubic inch, XD2, T/C	1	
—	1073855	Pump, air motor assembly, 48:1, 8.1 cubic inch, XD2, stainless steel ARW	1	
—	1073853	Pump, air motor assembly, 65:1, 5.8 cubic inch, SD2	1	
—	1073856	Pump, air motor assembly, 65:1, 5.8 cubic inch, XD2	1	
—	1085365	Pump, air motor assembly, 65:1, 5.8 cubic inch, SD2, T/C	1	
—	1085366	Pump, air motor assembly, 65:1, 5.8 cubic inch, XD2, T/C	1	
1	249144	• Muffler, $^1/_4$ NPT	2	
2	- - - - - -	• Air motor	1	A
3	1090926	• Rod, connecting	4	
4	1024870	• Coupling shaft	1	
5	1024875	• Coupler, split	1	
6	984172	• Nut, hex, lock, $^1/_2$-13 UNC-2B	4	
7	- - - - - -	• Hydraulic section	1	B
8	900464	• Adhesive, threadlocking	AR	
9	900481	• Adhesive, pipe sealant	AR	
NS	900256	• Fluid, Type-K, pump chamber, 1 gallon	AR	

NOTE A: Refer to the *Air Motor* parts list for detailed parts information.

B: Refer to the applicable *Hydraulic Section* parts list for detailed parts information.

AR: As Required

NS: Not Shown

© 2013 Nordson Corporation

Air Motor

See Figures 16, 17, and 18 along with the parts list that begins on page 28.

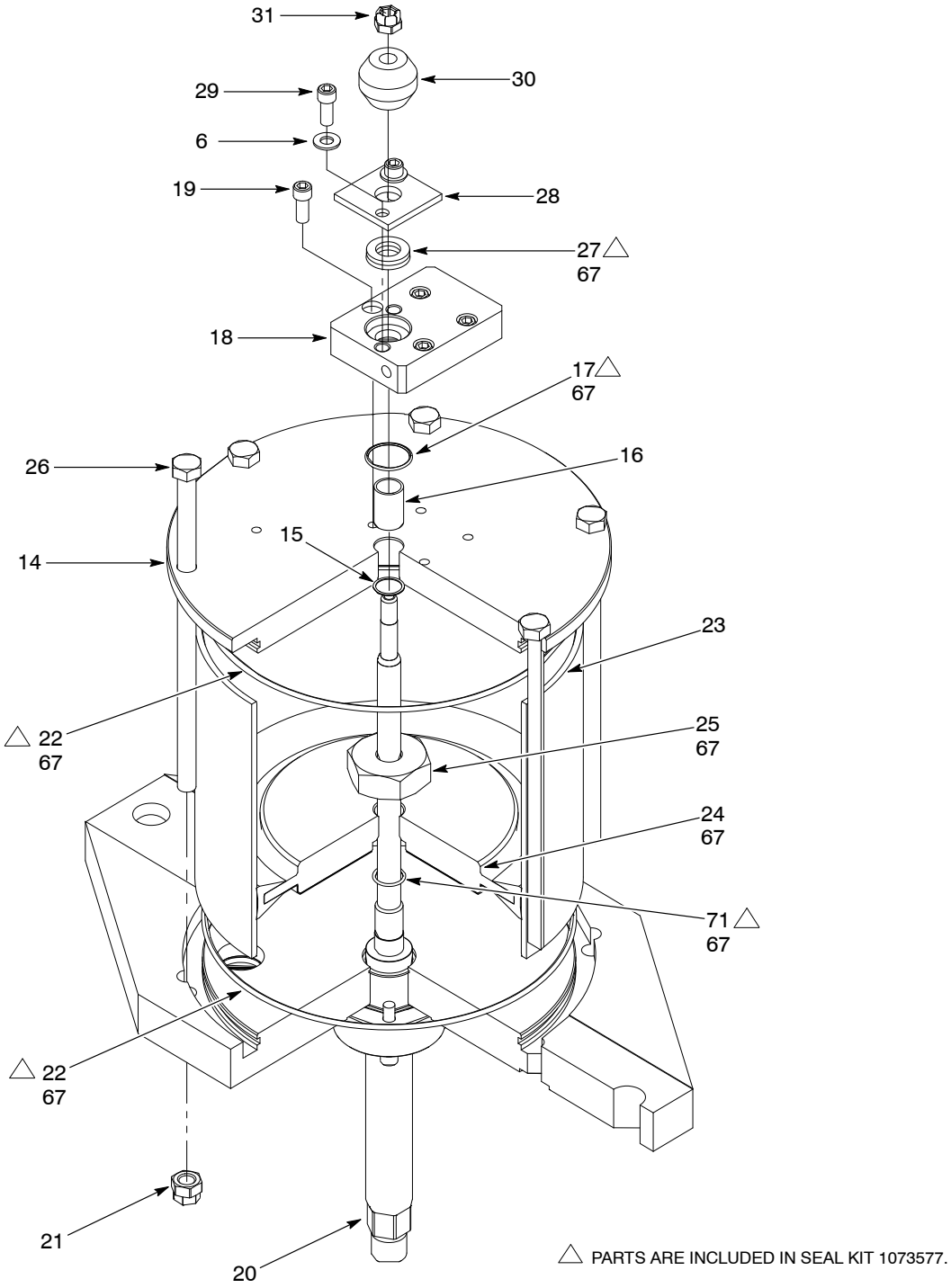

Figure 16 Air Motor Parts

© 2013 Nordson Corporation

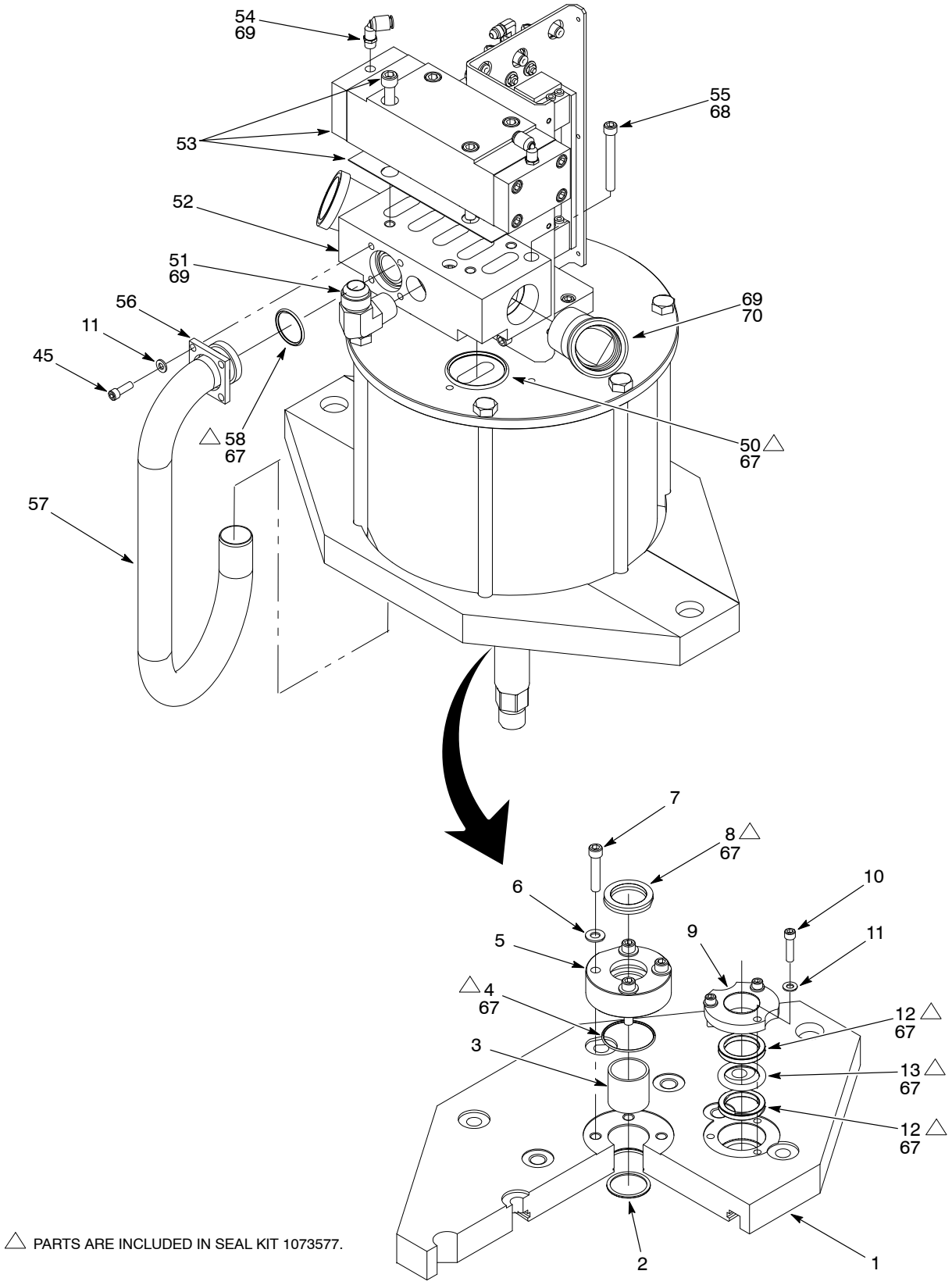

△ PARTS ARE INCLUDED IN SEAL KIT 1073577.

Figure 17 Air Motor Parts *(continued)*

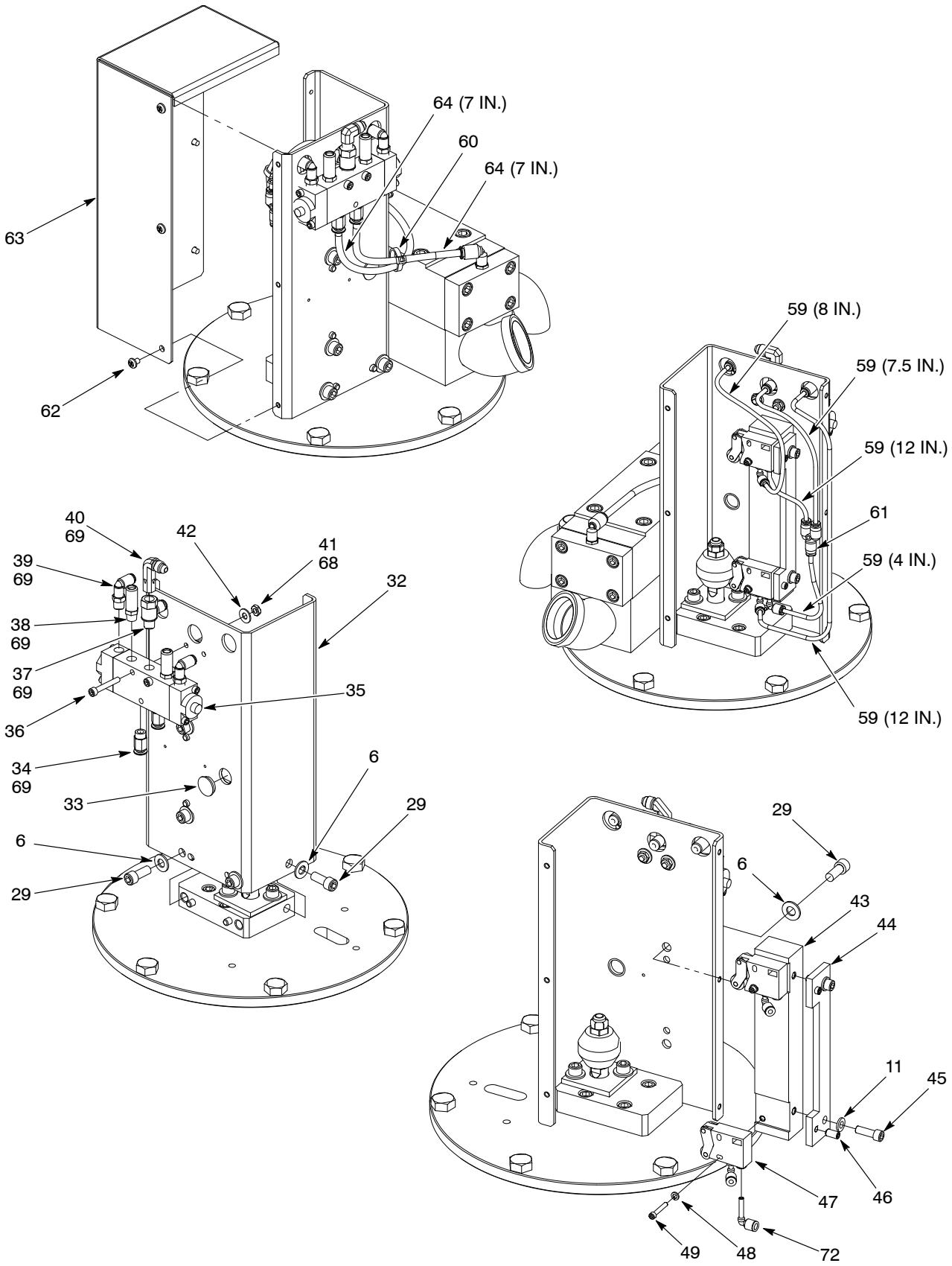

Figure 18 Air Motor Parts *(continued)*

© 2013 Nordson Corporation

Item	Part	Description	Qty	Note
—	1077362	Air Motor, 10-in., Rhino SD2/XD2	1	
1	1073852	• Plate, base, air motor, 10-in.	1	
2	1024803	• Retaining ring, internal, 143, spiral, heavy	1	
3	1060470	• Bushing, 1.25 ID x 1.438 OD x 1.375, TFE-lined	1	
4	- - - - - -	• O-ring, hot paint, 1.688 x 1.875 x 0.094	1	
5	1059595	• Retainer, seal, piston rod	1	
6	983050	• Washer, flat, E, 0.344 x 0.625 x 0.063 zinc	11	
7	981485	• Screw, socket, $^{5}/_{16}$–18 x 1.5	4	
8	- - - - - -	• U-cup, 1.250 ID x 1.75 OD x 0.250	1	
9	1066321	• Retainer, bushing, supply tube, air motor	1	
10	345751	• Screw, socket, $^{1}/_{4}$–20 x 1	3	
11	983410	• Washer, flat, M, narrow, M6	9	
12	- - - - - -	• Quad ring, –322, 1.225 ID x 0.210, Buna	2	
13	- - - - - -	• O-ring, –322, Buna-N, 1.225 ID, 0.210 w, 70 Duro	1	
14	1073851	• Cap, air motor, 10-in.	1	
15	1062563	• Retaining ring, internal, 75, spiral, heavy	1	
16	1060471	• Bushing, 0.625 ID x 0.75 OD x 1.125, TFE-lined	1	
17	- - - - - -	• O-ring, hot paint, 1.000 x 1.188 x 0.094	1	
18	1062227	• Retainer, seal, cycle rod	1	
19	981344	• Screw, socket, $^{5}/_{16}$–18 x 1	4	
20	1060402	• Rod, piston and trip, air motor, 10-in.	1	
21	345855	• Nut, lock, $^{1}/_{2}$–13, nylon insert	6	
22	942730	• O-ring, hot paint, 9.750 x 10 x 0.125	2	
23	1060359	• Cylinder, air, 10-in. diameter x 8.108	1	
24	1069505	• Piston, 10-in air motor	1	
25	1060403	• Retainer, piston/trip-rod, air motor	1	
26	345661	• Screw, hex, head, $^{1}/_{2}$–13 x 10	6	
27	- - - - - -	• U-cup, 0.625 ID x 1.125 OD, 0.25, 70 Duro	1	
28	1062313	• Plate, seal retainer, cycle rod	1	
29	981340	• Screw, socket, $^{5}/_{16}$–18 x 0.750	7	
30	1060242	• Bar, trip, air motor, 10-in.	1	
31	1062562	• Nut, lock, $^{7}/_{16}$–20, nylon insert	1	
32	1073832	• Plate, cover, trip-rod, air motor	1	
33	1062719	• Plug, finishing, $^{11}/_{16}$ diameter, fits 0.016/0.125	1	
34	972716	• Connector, male, $^{1}/_{4}$ tube x $^{1}/_{8}$ NPT	2	
35	1062002	• Valve, air, 2-position, 5-port, manual-override	1	
36	345758	• Screw, socket, 10-24 x 1.250	2	
37	1062584	• Tee, run, $^{1}/_{8}$ NPT male x $^{1}/_{8}$ NPT female, $^{5}/_{32}$	1	
38	1035504	• Muffler, exhaust, $^{1}/_{8}$-in. NPT male	2	
39	1060278	• Connector, male, elbow, $^{5}/_{32}$ x $^{1}/_{8}$ NPT	2	

Continued...

© 2013 Nordson Corporation

Item	Part	Description	Qty	Note
—	1077362	Air Motor, 10-in., Rhino SD2/XD2	1	
40	972151	• Ell, male, 37, $^{7}/_{16}$–20 x $^{1}/_{8}$	1	
41	984121	• Nut, hex, machine, #10-24	2	
42	345862	• Washer, flat, Type-a, #10 narrow	2	
43	1077364	• Pad, mounting, pneumatic trip, air motor, 10-in.	1	
44	1077457	• Plate, alignment, pneumatic trip	1	
45	345750	• Screw, socket, $^{1}/_{4}$–20 x 0.750	2	
46	1062570	• Screw, set, socket, flat, $^{1}/_{4}$–20 x $^{3}/_{8}$	2	
47	1077363	• Lever, roller, pneumatic trip	2	
48	983003	• Washer, flat, 0.156 x 0.312 x 0.032, 14456–CA	2	
49	981944	• Screw, socket, 6-32 x 0.875	2	
51	972583	• Ell, male, 37, $1^{1}/_{16}$–12 x $^{3}/_{4}$	1	
50	- - - - - -	• O-ring, hot paint, 2 x 2.25 x 0.125	1	
52	1063670	• Manifold, 10-in. air motor	1	
53	1061490	• Valve, air pilot, 2-position, 5-port	1	
54	972119	• Elbow, male, $^{1}/_{4}$ tube x $^{1}/_{8}$ NPT	2	
55	303654	• Screw, socket, $^{5}/_{16}$–18 x 2.5	3	
56	1063695	• Retainer, supply tube, 10-in. air motor	1	
57	1063671	• Tube, air supply, 10-in. air motor	1	
58	- - - - - -	• O-ring, hot paint, 1.250 x 1.438 x 0.094	1	
59	1073943	• Tubing, 4 mm, Nylon, Series-N, flex, clear	3 ft	
60	939110	• Strap, cable, 0.875 diameter	2	
61	1060290	• Y-union, $^{5}/_{32}$	1	
62	1062560	• Screw, pan head, 10-32 x 0.375	6	
63	1062215	• Cover, trip-rod, air motor	1	
64	1010810	• Tubing, $^{1}/_{4}$ OD polyethylene, flame resistant	1.6 ft	
65	- - - - - -	• Plate, identification	1	
66	981745	• Screw, drive, 0.187	2	
67	1031834	• Lubricant, TFE grease, 5-lb, 1-gal	AR	
68	900464	• Adhesive, Loctite 242, blue, removable, 50 ml	AR	
69	900481	• Adhesive, pipe/thd/hyd sealant PST	AR	
70	1069010	• Ell, pipe, 45, street, $1^{1}/_{4}$, brass	2	
71	- - - - - -	• O-ring, Viton, 0.739 ID x 0.070 w, brown, 10418	1	
72	1077465	• Connector, plug-in, elbow, male, 4 mm	3	
AR: As Required				

© 2013 Nordson Corporation

Notes:

© 2013 Nordson Corporation

5.8 Cubic Inch Standard and Temperature Conditioned Hydraulic Sections

See Figure 19 and the following parts list parts.

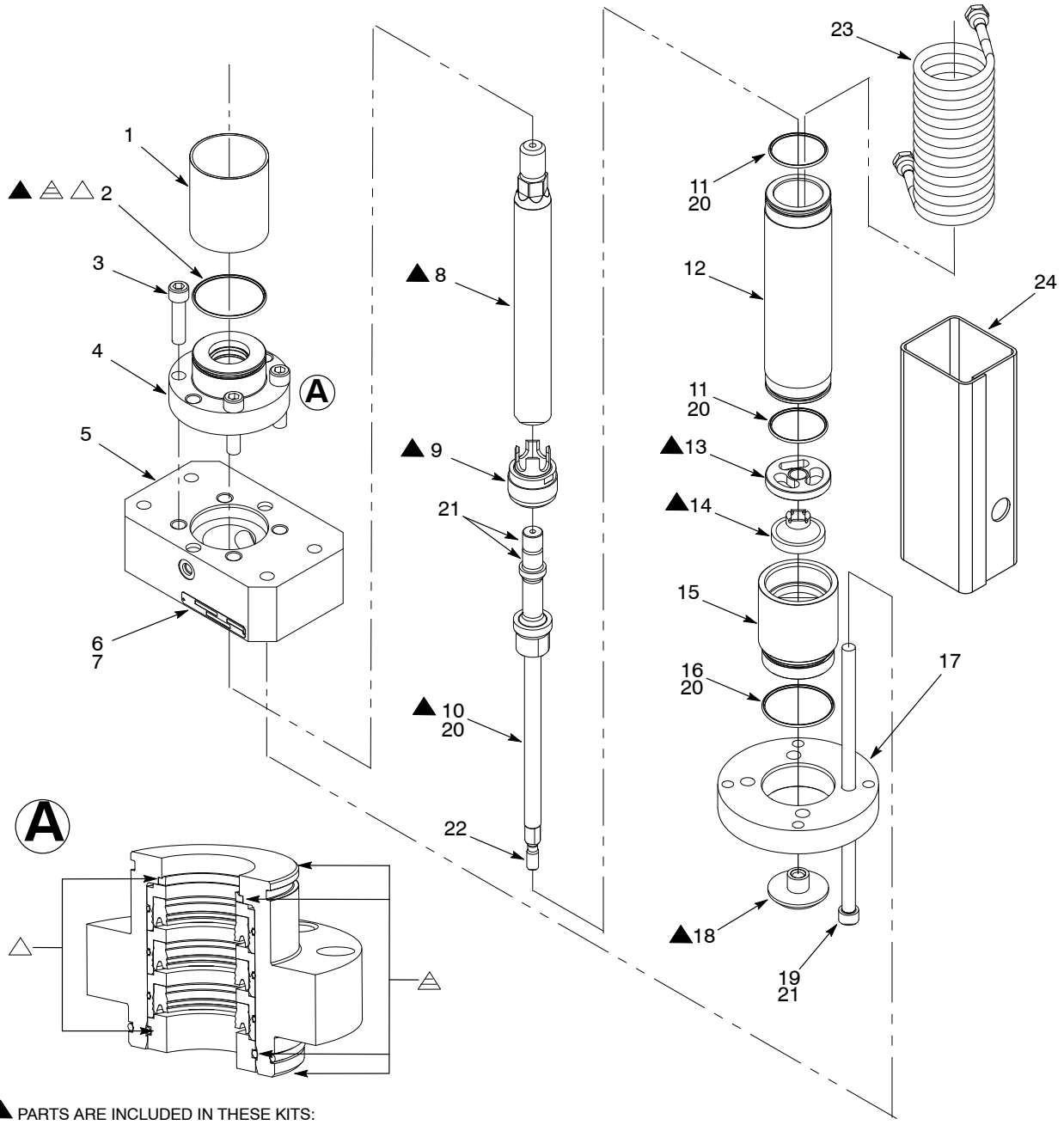

▲ PARTS ARE INCLUDED IN THESE KITS:
SD2 5.8 CUBIC INCH DRIVE TRAIN SERVICE KIT 1105066
XD2 5.8 CUBIC INCH DRIVE TRAIN SERVICE KIT 1105065

△ PARTS ARE INCLUDED IN THESE KITS:
SD2/XD2 5.8 CUBIC INCH PACKING GLAND SERVICE KIT 1104726

△ PARTS ARE INCLUDED IN THESE KITS:
SD2/XD2 5.8 CUBIC INCH PACKING GLAND INTERNAL PARTS SERVICE KIT 1081134

Figure 19 5.8 Cubic Inch Standard Hydraulic Section Parts

© 2013 Nordson Corporation

Item	Part	Part	Part	Part	Description	Qty	Note
—	1081130				Pump, 1.375 diameter, 5.8 cubic inch, Rhino SD2	1	
—		1081131			Pump, 1.375 diameter, 5.8 cubic inch, Rhino XD2	1	
—			1085367		Pump, 1.375 diameter, 5.8 cubic inch, Rhino SD2 temperature conditioned	1	
—				1084888	Pump, 1.375 diameter, 5.8 cubic inch, Rhino XD2 temperature conditioned	1	
1	1059749	1059749	1059749	1059749	• Chamber, solvent	1	
2	941450	941450	941450	941450	• O ring, Viton, 2.563 x 2.750 x 0.094, 10545	1	
3	1053264	1053264	1053264	1053264	• Screw, socket, 1/2-13 x 2	4	
4	- - - - - -	- - - - - -	- - - - - -	- - - - - -	• Gland assembly tri-lip, 1.375 diameter	1	
5	1058797	1058797	1013172	1013172	• Body, pump, upper, 1.375 diameter	1	
6	- - - - - -	- - - - - -	- - - - - -	- - - - - -	• Screw, drive, 0.187	2	
7	- - - - - -	- - - - - -	- - - - - -	- - - - - -	• Plate, identification	1	
8	1015823		1015823		• Rod, plunger, 1.375 diameter, chrome	1	
		1053015		1053015	• Rod, plunger, 1.375 diameter, Rhino XD2	1	
9	1015667	1015667	1015667	1015667	• Piston assembly, 1.375 diameter	1	
10	1101793	1101793	1101793	1101793	• Rod assembly, 1.375 diameter	1	
11	1062623	1062623	1062623	1062623	• O ring, –140 Viton	2	
12	1058798	1058798	1058798	1058798	• Cylinder, pump housing,1.375 diameter	1	
13	- - - - - -	- - - - - -	- - - - - -	- - - - - -	• Spacer, shaft support, 1.375 diameter	1	
14	1015648	1095969	1015648	1095969	• Plate, lower check, 1.375 diameter	1	
15	1058799	1058799	1058799	1058799	• Housing, bottom pump, 1.375 diameter	1	
16	1049516	1049516	1049516	1049516	• O ring, –144, Viton	1	
17	1058800	1058800	1058800	1058800	• Plate, housing, follower, 1.375 diameter	1	
18	1011361	1011361	1011361	1011361	• Plate, shovel, follower, 1.375 diameter	1	
19	1015990	1015990	1015990	1015990	• Screw, socket, 1/2–13 x 12	4	
20	900223	900223	900223	900223	• Lubricant, O ring, parker, 4 oz, 30122–5	1	
21	900344	900344	900344	900344	• Lubricant, Never Seez, 8–oz can	1	
22	900464	900464	900464	900464	• Adhesive, Loctite 242, blue, removable, 50 ml	1	
23			1084904	1084904	• Coil, temperature conditioned pump	1	
24			1085225	1085225	• Cover, temperature conditioned pump	1	

© 2013 Nordson Corporation

8.1 Cubic Inch Standard and Temperature Conditioned Hydraulic Sections

See Figure 20 and the following parts list.

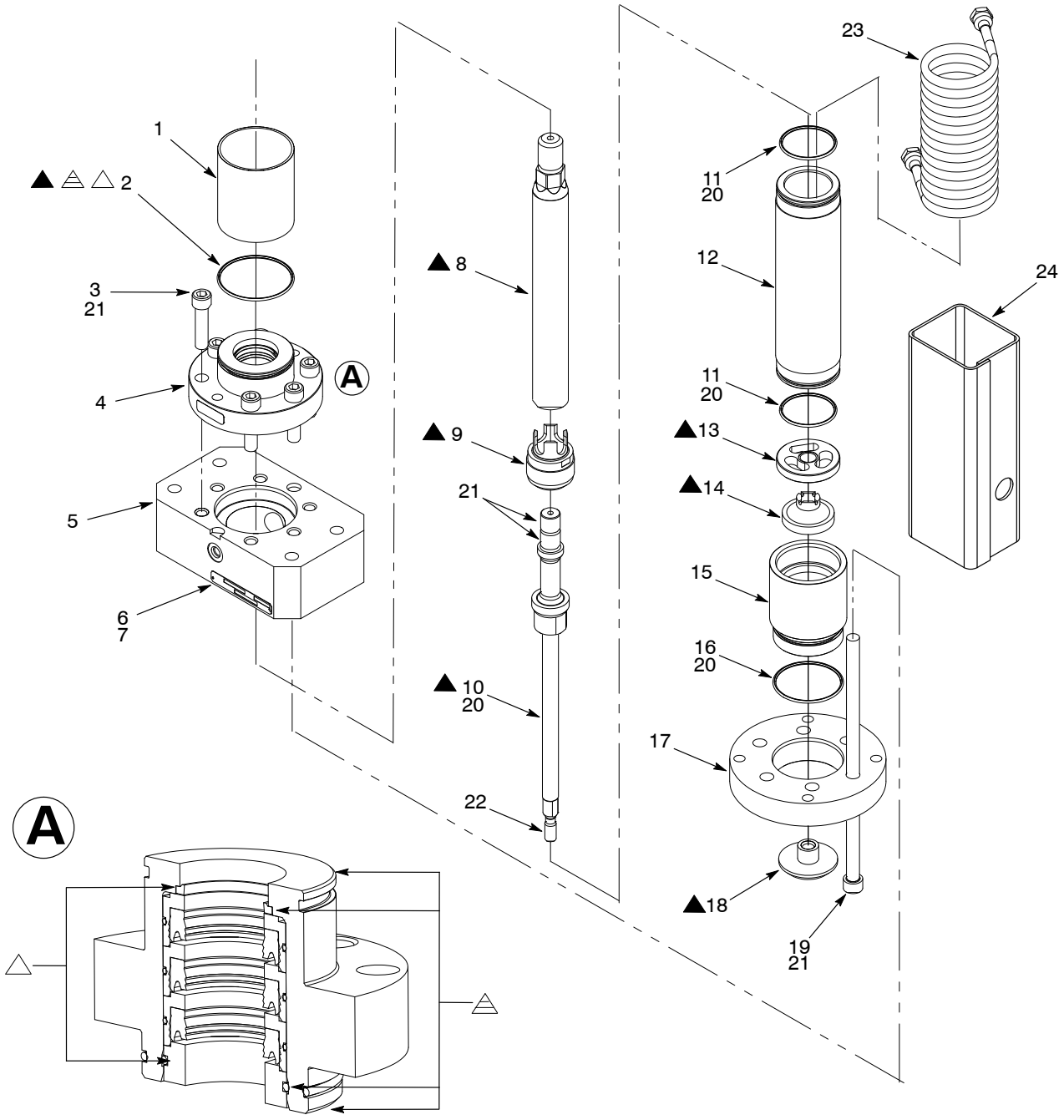

▲ PARTS ARE INCLUDED IN THESE KITS:
SD2 8.1 CUBIC INCH DRIVE TRAIN SERVICE KIT 1105067
XD2 8.1 CUBIC INCH DRIVE TRAIN SERVICE KIT 1105068

△ PARTS ARE INCLUDED IN SD2/XD2 8.1 CUBIC INCH PACKING GLAND SERVICE KIT 1104731.

△ PARTS ARE INCLUDED IN SD2/XD2 8.1 CUBIC INCH PACKING GLAND INTERNAL PARTS SERVICE KIT 1081135.

Figure 20 8.1 Cubic Inch Standard and Temperature Conditioned Hydraulic Section Parts

© 2013 Nordson Corporation

Item	Part	Part	Part	Part	Description	Qty	Note
—	1081133				1.625 diameter, 8.1 cubic inch, Rhino SD2	1	
—		1085369			1.625 diameter, 8.1 cubic inch, Rhino SD2, temperature conditioned	1	
—			1081132		1.625 diameter, 8.1 cubic inch, Rhino XD2	1	
—				1085368	1.625 diameter, 8.1 cubic inch, Rhino XD2, temperature conditioned	1	
1	1011324	1011324	1011324	1011324	• Chamber, solvent	1	
2	1015987	1015987	1015987	1015987	• O ring, –149, Viton	1	
3	1053264	1053264	1053264	1053264	• Screw, socket, 1/2–13 x 2	6	
4	- - - - - -	- - - - - -	- - - - - -	- - - - - -	• Gland assembly, tri-lip, 1.625 diameter, flange mount	1	
5	1013172	1013172	1013172	1013172	• Body, pump, upper, 1.625/1.375	1	
6	- - - - - -	- - - - - -	- - - - - -	- - - - - -	• Screw, drive, 0.187	2	
7	- - - - - -	- - - - - -	- - - - - -	- - - - - -	• Plate, identification	1	
8	1015822	1015822			• Rod, plunger, 1.625 diameter, chrome	1	
			1053014	1053014	• Rod, plunger, 1.625 diameter, Score Guard	1	
9	1011340	1011340	1011340	1011340	• Piston assembly, 1.625 diameter	1	
10	1101794	1101794	1101794	1101794	• Rod assembly, 1.625 diameter	1	
11	1015989	1015989	1015989	1015989	• O ring, –144, Viton	2	
12	1011346	1011346	1011346	1011346	• Cylinder, pump housing, 1.625	1	
13	1075048	1075048	1075048	1075048	• Spacer, shaft support, 1.625 diameter	1	
14	1011349	1011349			• Plate, lower check, 1.625 diameter	1	
			1053043	1053043	• Plate, lower check, 1.625 diameter, Score Guard	1	
15	1011347	1011347	1011347	1011347	• Housing, bottom, pump, 1.625 diameter	1	
16	1015986	1015986	1015986	1015986	• O ring, –150, Viton	1	
17	1011360	1011360	1011360	1011360	• Plate, housing, follower, 1.625/1.375	1	
18	1032764	1032764	1032764	1032764	• Plate, shovel, follower, 1.625 diameter	6	
19	1015990	1015990	1015990	1015990	• Screw, socket, 1/2–13 x 12	6	
20	900223	900223	900223	900223	• Lubricant, O ring, Parker, 4 oz, 30122–5	1	
21	900344	900344	900344	900344	• Lubricant, Never Seez, 8–oz can	1	
22	900464	900464	900464	900464	• Adhesive, Loctite 242, blue, removable, 50 ml	1	
23		1085380		1085380	• Coil, temperature conditioned pump	1	
24		1085225		1085225	• Cover, temperature conditioned pump	1	

© 2013 Nordson Corporation

8.1 Cubic Inch Stainless Steel Hydraulic Section

See Figure 21 and the following parts list.

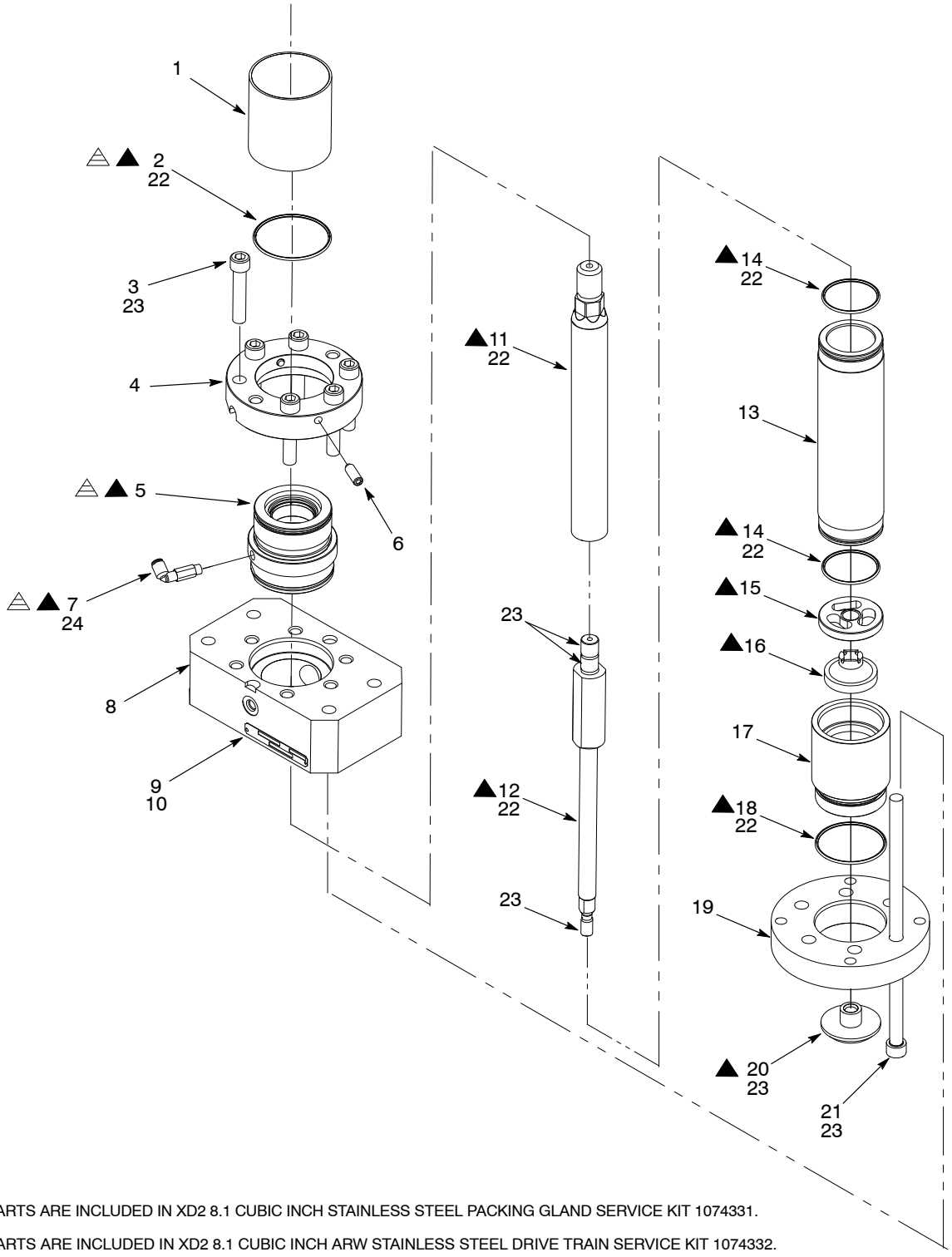

△ PARTS ARE INCLUDED IN XD2 8.1 CUBIC INCH STAINLESS STEEL PACKING GLAND SERVICE KIT 1074331.

▲ PARTS ARE INCLUDED IN XD2 8.1 CUBIC INCH ARW STAINLESS STEEL DRIVE TRAIN SERVICE KIT 1074332.

Figure 21 8.1 Cubic Inch Stainless Steel Hydraulic Parts

© 2013 Nordson Corporation

Item	Part	Description	Qty	Note
—	1058351	Pump, Rhino XD2, 1.625 diameter, 8.1 cubic inch, stainless steel, ARW	1	
1	1011324	• Chamber, solvent	1	
2	1015987	• O ring, –149, Viton,	1	
3	1029126	• Screw, socket, 1/2–13 x 2.5	6	
4	1058473	• Collar, ARW gland, rhino XD2, 1.625 diameter	1	
5	– – – – – –	• Gland assembly, ARW, stainless steel	1	
6	981628	• Screw, set, with Nylok, 3/8-16 x 1	2	
7	972889	• Elbow, male, ext, 1/4 T x 1/8 NPT	2	
8	1058323	• Body, pump, upper, stainless steel 1.625/1.375	1	
9	– – – – – –	• Plate, identification	1	
10	– – – – – –	• Screw, drive, 0.187	2	
11	1058330	• Rod, plunger, 1.625 diameter, stainless steel, Score Guard	1	
12	1600419	• Rod, lower check/shovel, 1.625 diameter, stainless steel	1	
13	1058325	• Cylinder, pump housing, 1.625, stainless steel	1	
14	1015989	• O ring, –144, Viton	2	
15	1058331	• Spacer, shaft support, 1.625 diameter, stainless steel	1	
16	1058332	• Plate, lower check, 1.625 diameter, Score Guard, stainless steel	1	
17	1058326	• Housing, bottom, pump, 1.625 diameter, stainless steel	1	
18	1015986	• O ring, –150, Viton,	1	
19	1058328	• Plate, housing, follower, 1.625/1.375, stainless steel	1	
20	1058327	• Plate, shovel, follower, 1.625 diameter	1	
21	1053045	• Screw, socket, 1/2–13 x 12	6	
22	156289	• Lubricant, Mobil SHC 634, 30122–8	AR	
23	900344	• Lubricant, Never Seez, 8–oz can	1	
24	900481	• Adhesive, pipe	1	

Tools

The following tools are available for the Rhino SD2/XD2 pumps.

Item	Kit	Part
5.8 Cubic Inch Hydraulic Sections	Removal arbor, packing gland internal parts	1073580
	Insertion tool, gland packing internal parts	1081096
	Insertion tool, packing gland replacement	1073589
8.1 Cubic Inch Hydraulic Sections	Removal arbor, packing gland internal parts	1073582
	Insertion tool, gland packing internal parts	1081097
	Insertion tool, packing gland replacement	1035823
8.1 Cubic Inch Stainless Steel Hydraulic Section	Insertion tool, packing gland replacement	1035823

© 2013 Nordson Corporation

Kits

The following kits are available for the Rhino SD2/XD2 pumps.

Item	Kit	Part
Air Motor	Seals	1073577
5.8 Cubic Inch Hydraulic Sections	SD2 Drive Train	1105066
	SD2 CE Drive Train	1083820
	XD2 Drive Train	1105065
	XD2H Drive Train	1083817
	SD2/XD2 Internal Packing Gland Parts NOTE: This kit only includes the internal packing gland parts.	1081134
	SD2/XD2 CE Internal Packing Gland Parts NOTE: This kit only includes the internal packing gland parts.	1083818
	SD2/XD2 Packing Gland Assembly NOTE: This kit includes packing gland and the internal packing gland parts. NOTE: Refer to the *Rhino SD2/XD2 Packing Gland Replacement* operator's card 1075674 for more data.	1104726
	SD2/XD2 CE Packing Gland Assembly NOTE: This kit includes packing gland and the internal packing gland parts. NOTE: Refer to the *Rhino SD2/XD2 Packing Gland Replacement* operator's card 1075674 for more data.	1083819
	XD2H Internal Packing Gland Parts NOTE: This kit only includes the internal packing gland parts.	1083815
	XD2H Packing Gland Assembly NOTE: This kit includes packing gland and the internal packing gland parts. NOTE: Refer to the *Rhino SD2/XD2 Packing Gland Replacement* operator's card 1075674 for more data.	1083816
8.1 Cubic Inch Hydraulic Sections	SD2 Drive Train	1105067
	XD2 Drive Train	1105068
	Internal Packing Gland Parts NOTE: This kit only includes the internal packing gland parts.	1081135
	Packing Gland Assembly NOTE: This kit includes the packing gland and internal packing gland parts. NOTE: Refer to the *Rhino SD2/XD2 Packing Gland Replacement* operator's card 1075674 for more data.	1104731
8.1 Cubic Inch Stainless Steel Hydraulic Sections	Drive Train, XD2 Stainless Steel	1074332
	XD2 Stainless Steel Packing Gland Assembly XD2 Stainless Steel Packing Gland Internal Components NOTE: Refer to the *Rhino XD2 Stainless Steel Packing Gland Replacement* operator's card 1081653 for more data.	1074331 1603003

© 2013 Nordson Corporation

Mounting Hardware

The following Mounting Hardware is available for the pump.

30/55-Gallon Drum Unloaders

See Figure 22 and refer to the following parts list.

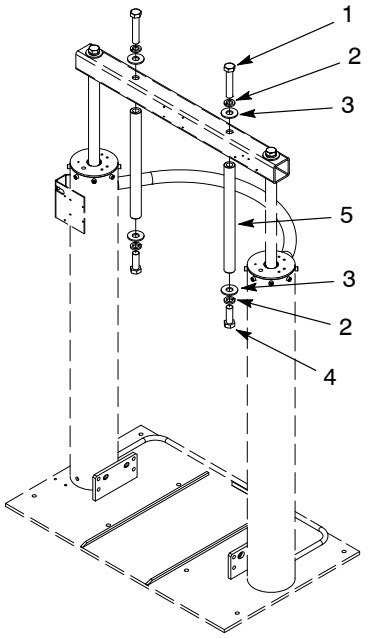

Figure 22 30/55-Gallon Drum Mounting Hardware

Item	Part	Description	Qty
—	1069893	Pump, mounting to frame, 30/55-gallon	—
1	981664	• Screw, $^7/_8$-14 x 4.5	2
2	983501	• Washer, lock, $^7/_8$	4
3	983254	• Washer, flat, 0.938 x 1.75 x 0.134	4
4	345719	• Screw, $^7/_8$-14 x 3	2
5	126751	• Rod, mounting	2

5-Gallon Pail Unloaders

See Figure 23 and refer to the following parts list.

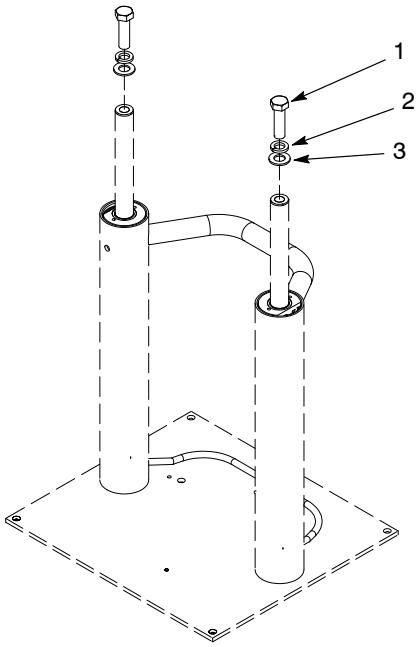

Figure 23 5-Gallon Pail Mounting Hardware

Item	Part	Description	Qty
—	1070032	Pump, mounting to frame, 5-gallon	—
1	345719	• Screw, $^7/_8$-14 x 2.75	2
2	983501	• Washer, lock, $^7/_8$	2
3	983254	• Washer, flat, 0.938 x 1.75 x 0.134	2

© 2013 Nordson Corporation

Specifications

Following are the specifications for the pump.

Air Motor

Table 3 lists the hydraulic output ratios. See Figure 24 for air consumption data.

Table 3 Output Ratios

Air Motor	Hydraulic Section		
	5.8 cu-in.	**8.1 cu-in.**	**8.1 cu-in. Stainless Steel**
10-inch	65:1	48:1	48:1

Hydraulic Section

Table 4 lists the specifications for the hydraulic sections.

Table 4 Hydraulic Section Specifications

Item	Hydraulic Section		
	5.8 cu-in.	**8.1 cu-in.**	**8.1 cu-in. Stainless Steel**
Maximum Output	174 cu-in./min. (2.85 liters/min.)	243 cu-in./min. (3.98 liters/min.)	121 cu-in./min. (1.98 liters/min.)
Maximum Stroke Rate	Intermittent: 1 stroke per 2 sec (30 strokes/min.) Continuous: 1 stroke per 4 sec (15 strokes/min.)		
Viscosity Range	30,000–3 million centipoise		
Wetted Component Materials	SD2 Standard Hydraulic Section: Carbon Steel, Stainless Steel, Brass, Aluminum, Proprietary Ceramic Coating, Chrome Plated Carbon Steel, Viton, UHMWPE XD2 Standard Hydraulic Section: Carbon Steel, Stainless Steel, Brass, Aluminum, Proprietary Ceramic Coating, Viton, UHMWPE XD2 Stainless Steel Hydraulic Section: Stainless Steel 400- and 300-Series, Proprietary Ceramic Coating, Viton, Polyester XD2H heated Hydraulic Section: Carbon Steel, Stainless Steel, Brass, Proprietary Ceramic Coating, Viton, Peek		

© 2013 Nordson Corporation

Air Requirements

See Figure 24. The minimum instantaneous flow rate must be at least 175 SCFM at 60 psi for rapid air motor direction changes. This flow rate minimizes material pressure loss during pump shifts.

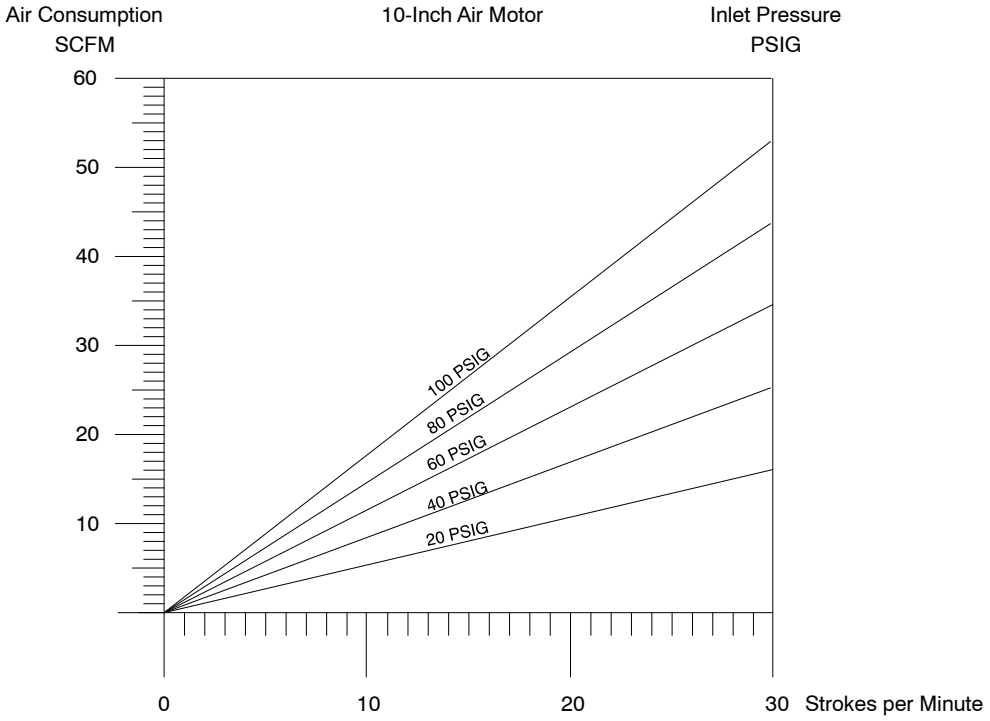

Figure 24 Air Consumption

Pneumatic Schematic

See Figure 25.

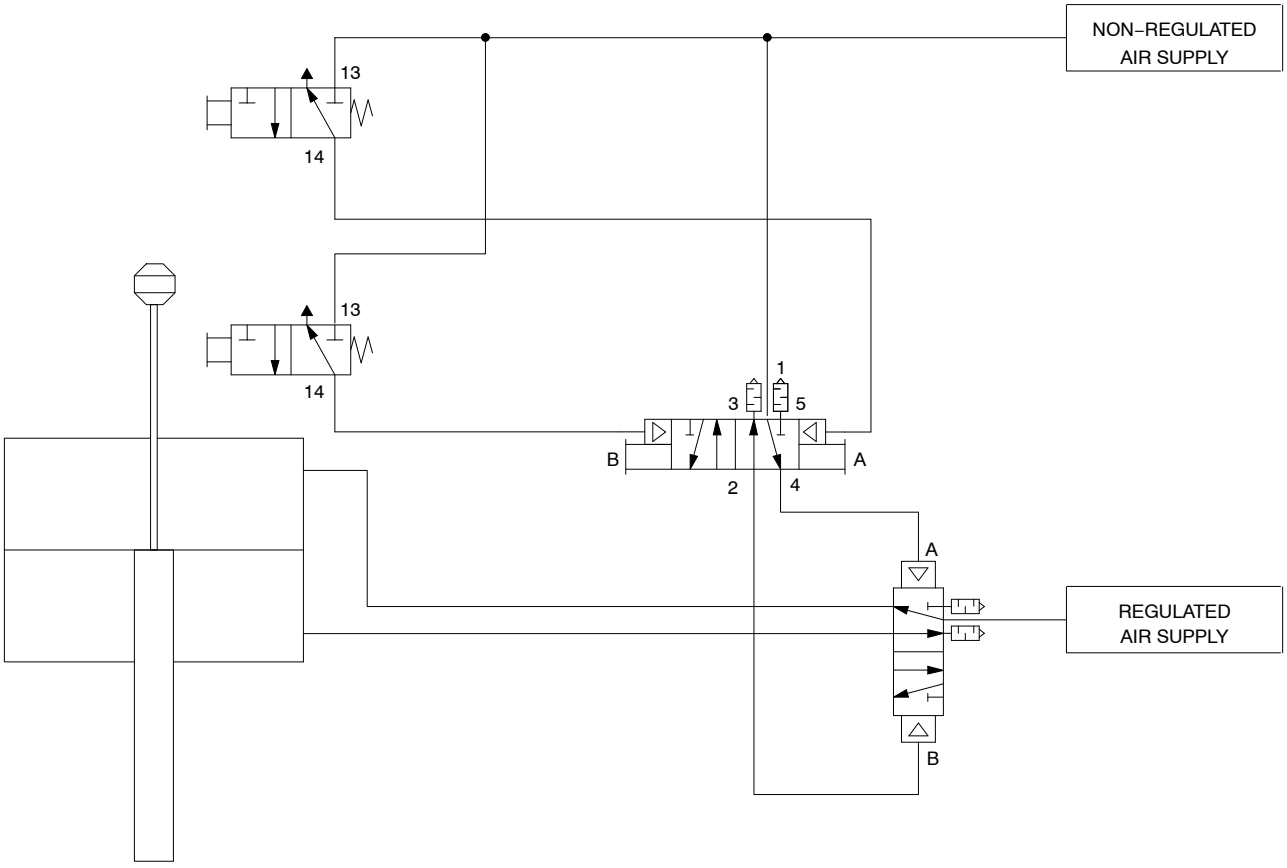

Figure 25 Pneumatic Schematic

© 2013 Nordson Corporation

Preventive Maintenance

! WARNING !

Allow only qualified personnel to perform the following tasks. Follow the safety instructions in this document and all other related documentation.

NOTE: It may be necessary to adjust frequencies due to the facility enviornment, process parameters, material being applied, or experience.

NOTE: The frequencies listed in Table 5 are only guidelines. Always perform preventive maintenance procedures according to your facility maintenance schedule.

Table 5 Preventive Maintenance Schedule

Item	Task	Time to Complete	Frequency			
			Daily	Weekly	Pump Strokes	Other
Air Motor						
Hose Connections	Check and tighten if necessary	5 min.		X		
Pressurized Components	Inspect for leaks	5 min.		X		
Trip Rod U-Cup Seal	Replace	30 min.			2,000,000	
Piston Rod Seal	Replace	30 min.			2,000,000	
Piston Assembly	Replace	2 hours			4,000,000	
Pilot Valves	Replace	30 min.			8,000,000	
Main Air Motor Control Valve	Replace	30 min.			8,000,000	
Intermediate Valve	Replace	15 min.			8,000,000	
Floating Joint Coupler	Replace	45 min.			2,000,000	
Hydraulic Pump Assembly						
Solvent Chamber	Inspect and refill with fluid if necessary	5 min.	X			
Solvent Chamber Fluid	Replace	5 min.		X		
Packing Gland	Inspect for leaks and replace if necessary	Inspect: 2 min. Replace: 30 min.		X		
	Replace	30 min.			100,000	
Plunger Rod (Chrome)	Replace every other packing change or, if damaged or scored	2 hours			200,000	
Plunger Rod (Score Guard)	Replace every other packing change or, if damaged or scored	2 hours			400,000	
Complete Drive Train Assembly	Replace	2 hours			400,000	

© 2013 Nordson Corporation

Notes:

© 2013 Nordson Corporation